LEGO Technic

8230

4.101.169

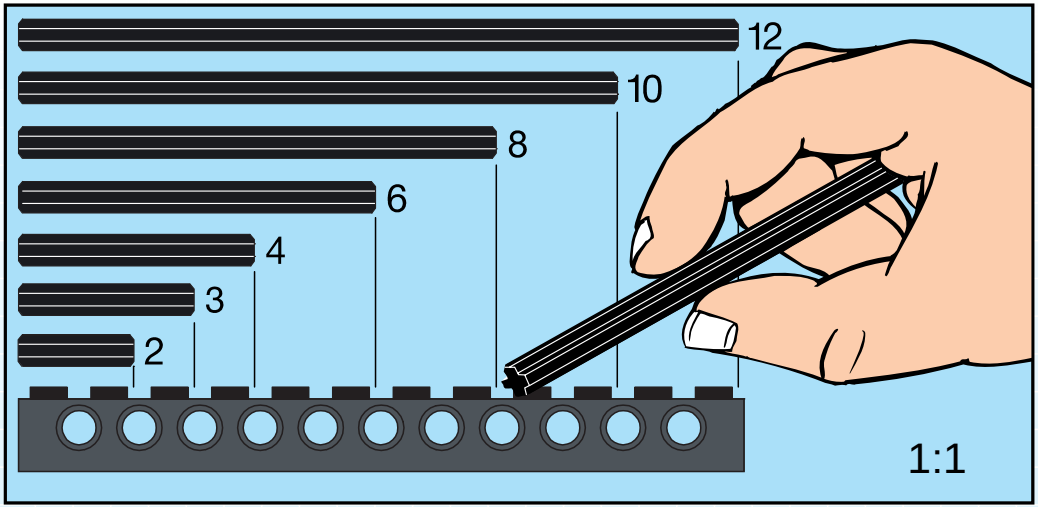
12
10
8
6
4
3
2
1:1

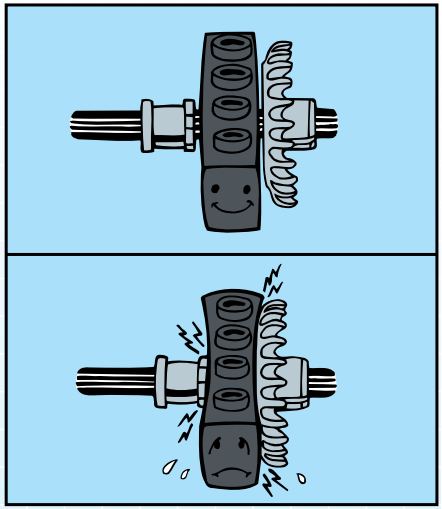

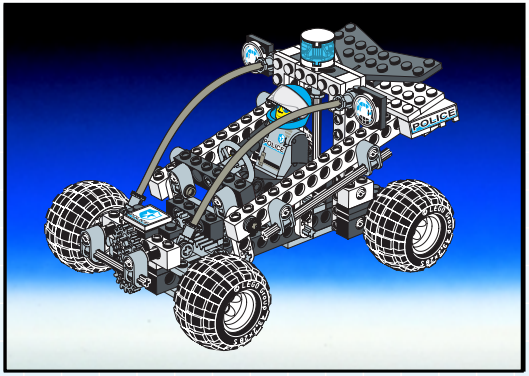

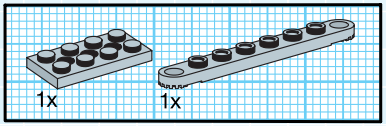

1

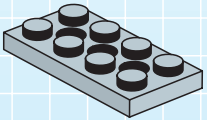

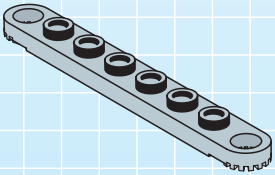

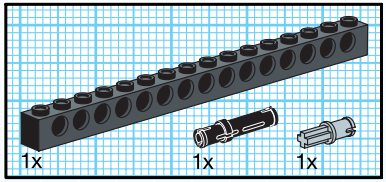

2

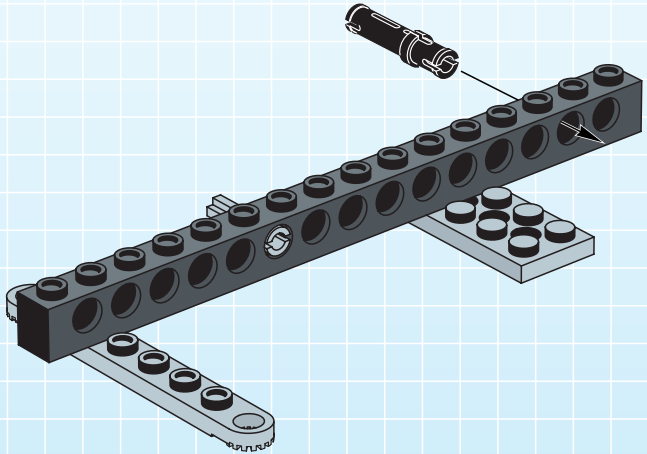

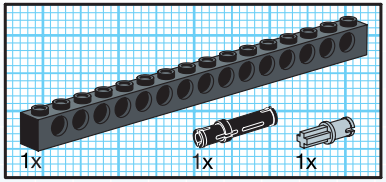

3

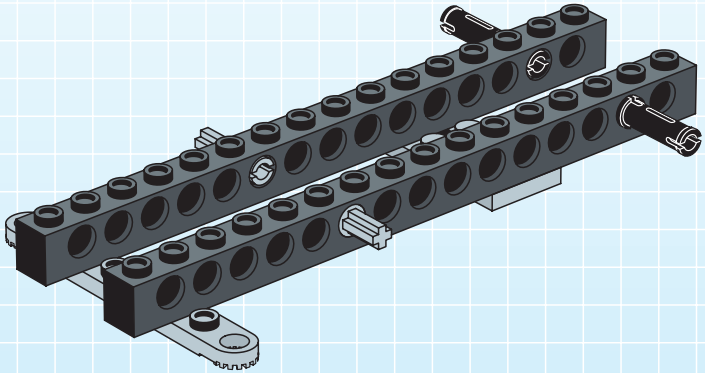

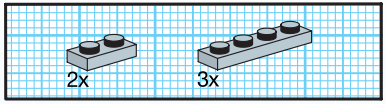

4

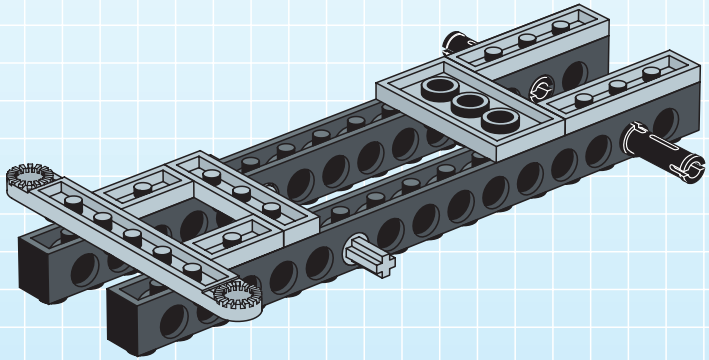

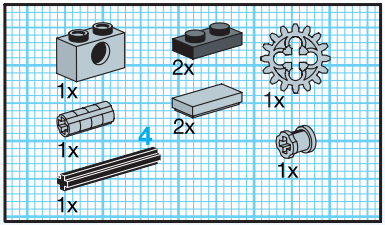

5

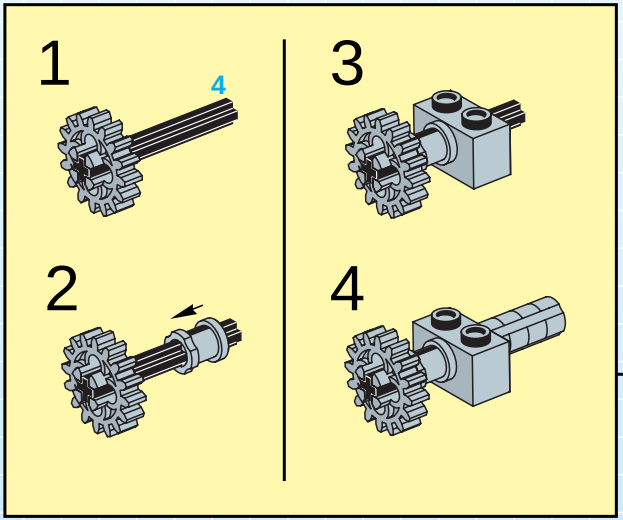

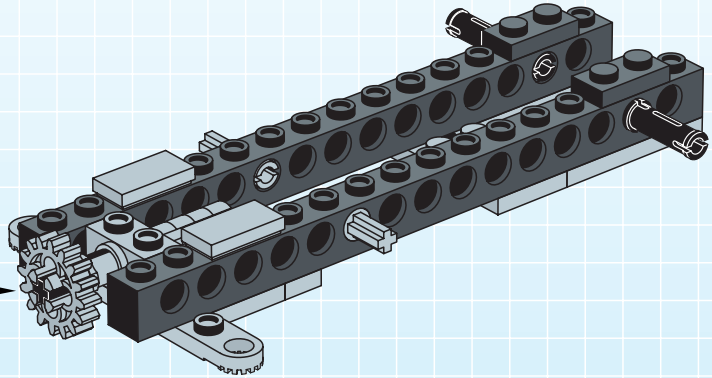

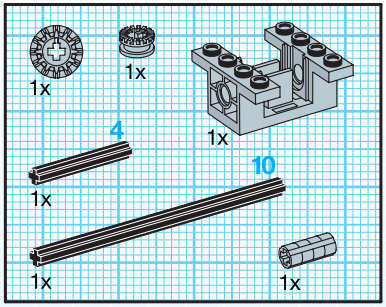

6

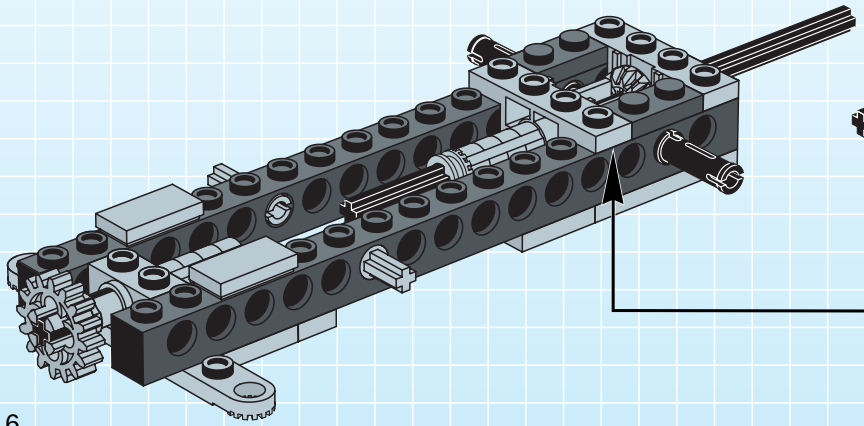

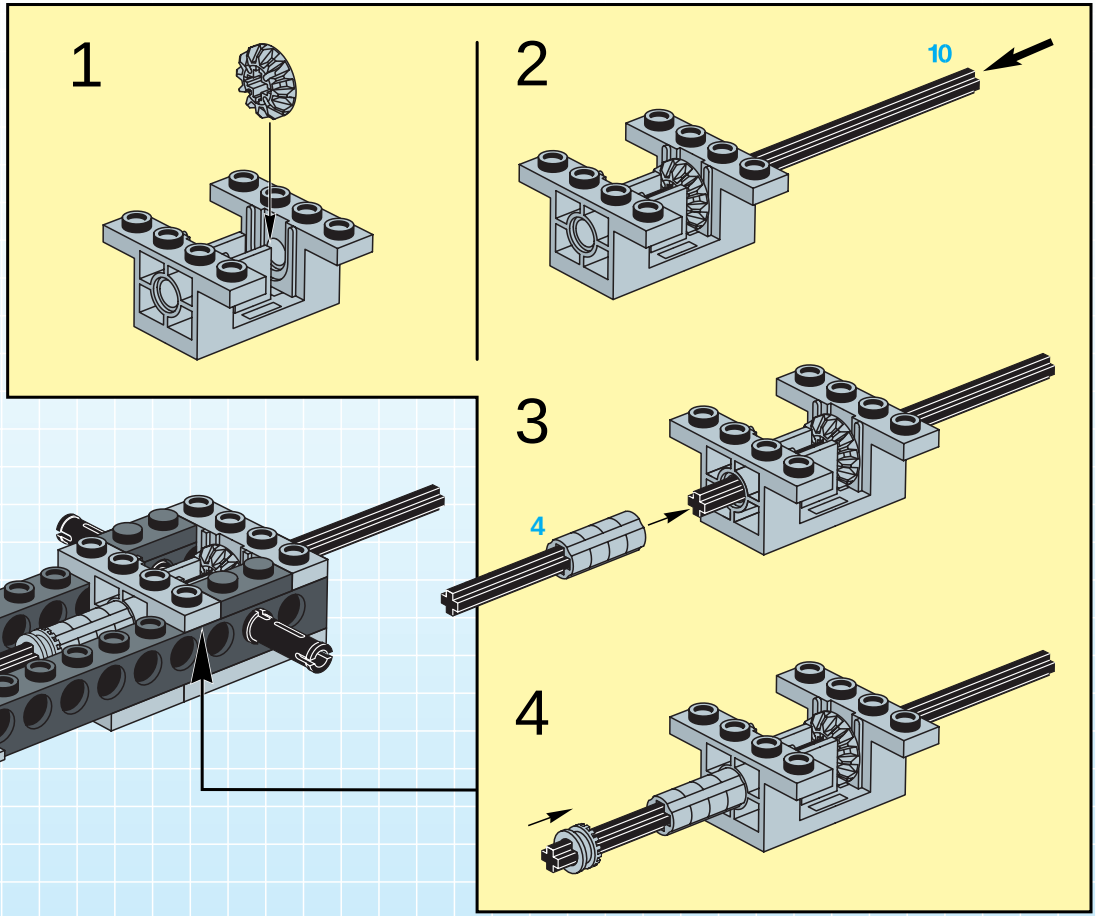

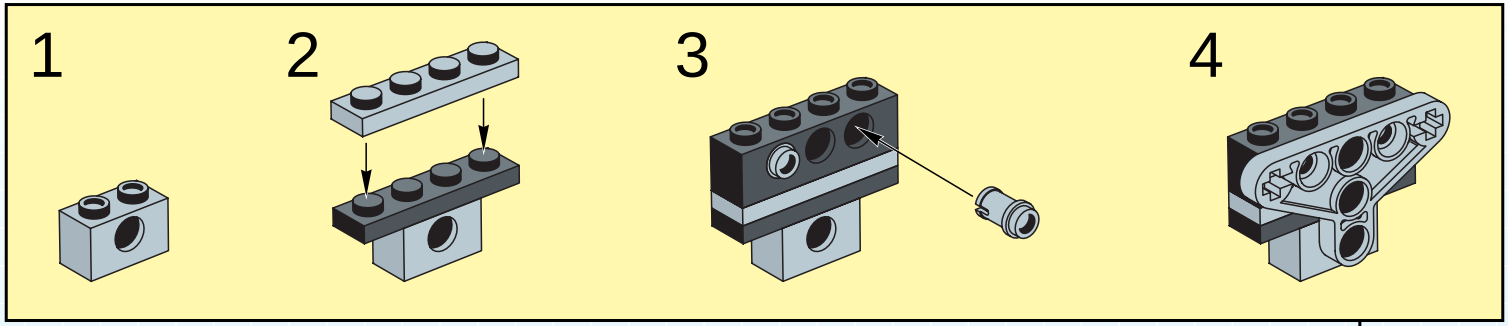

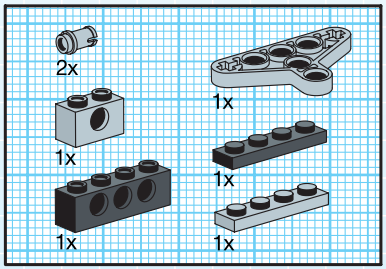

7

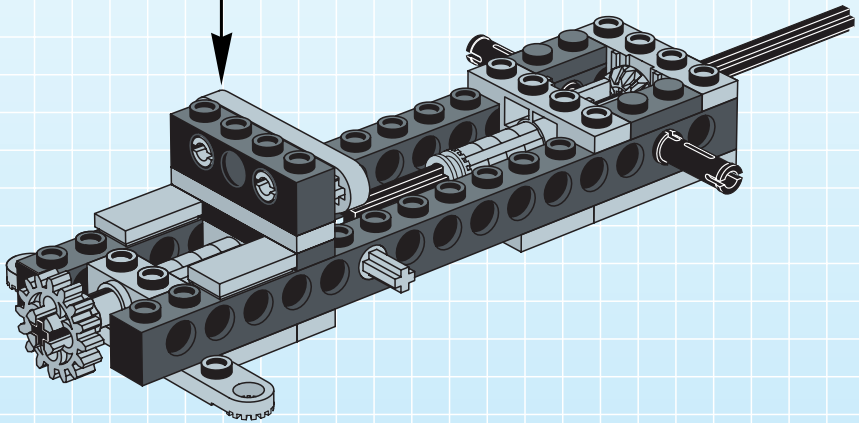

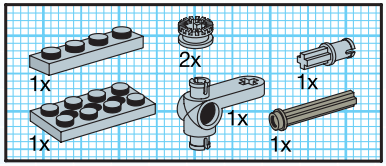

8

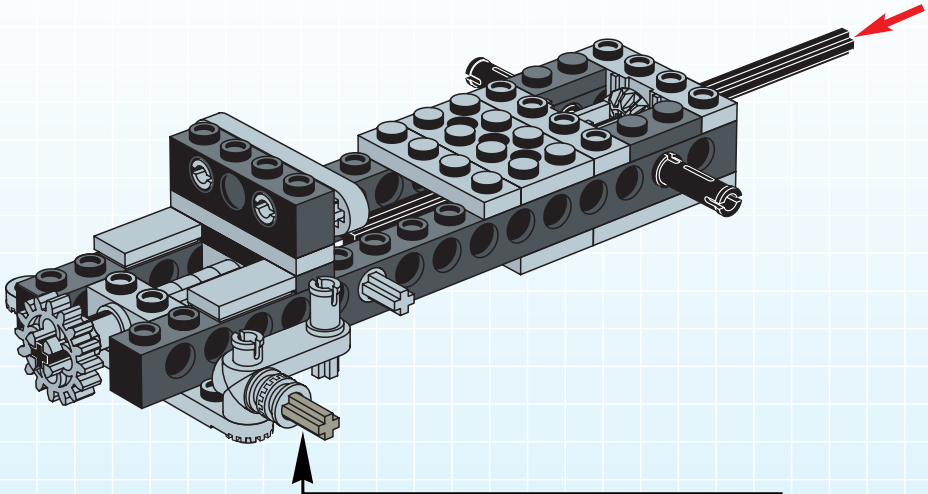

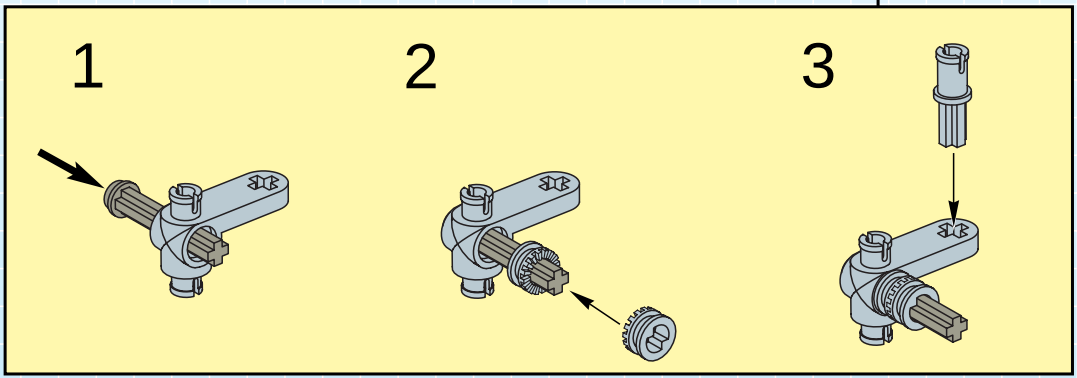

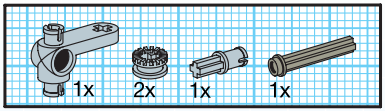

9

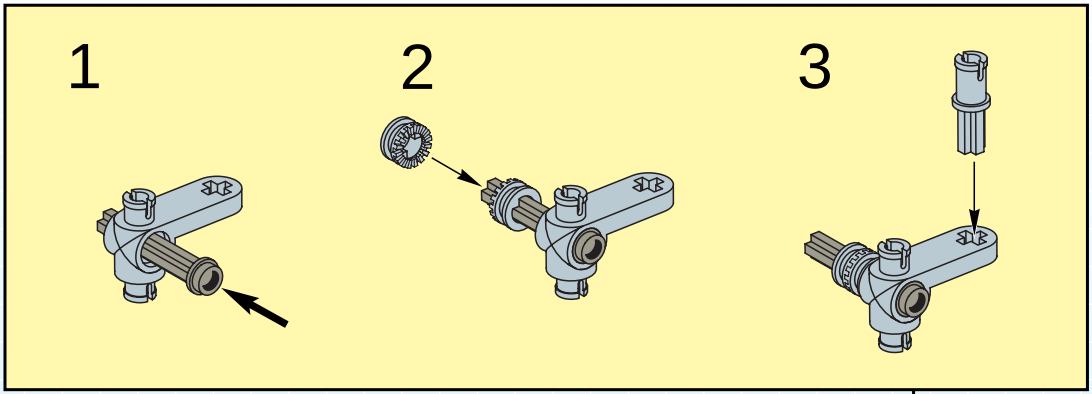

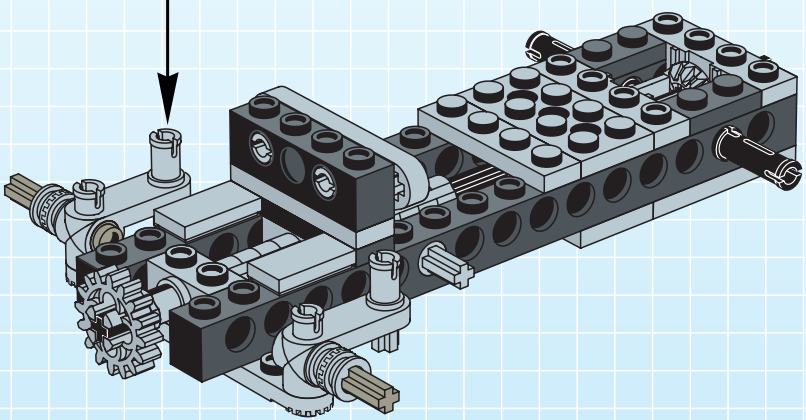

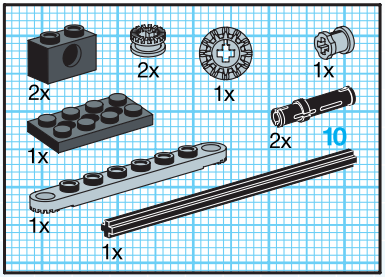

10

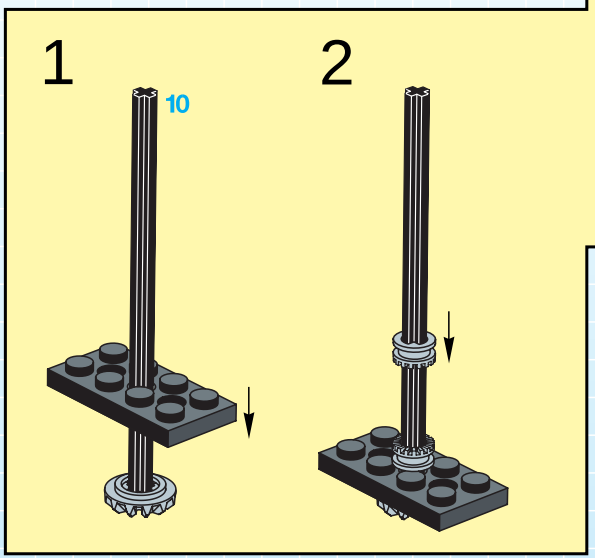

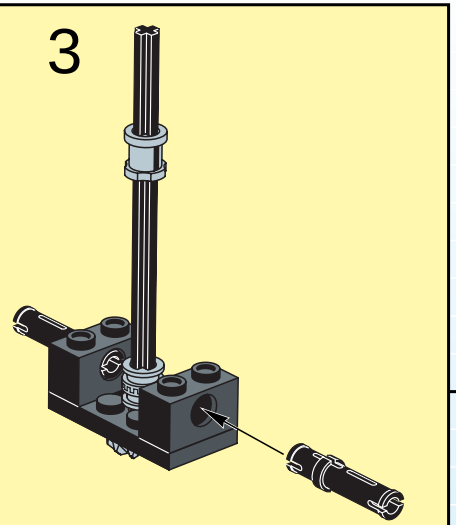

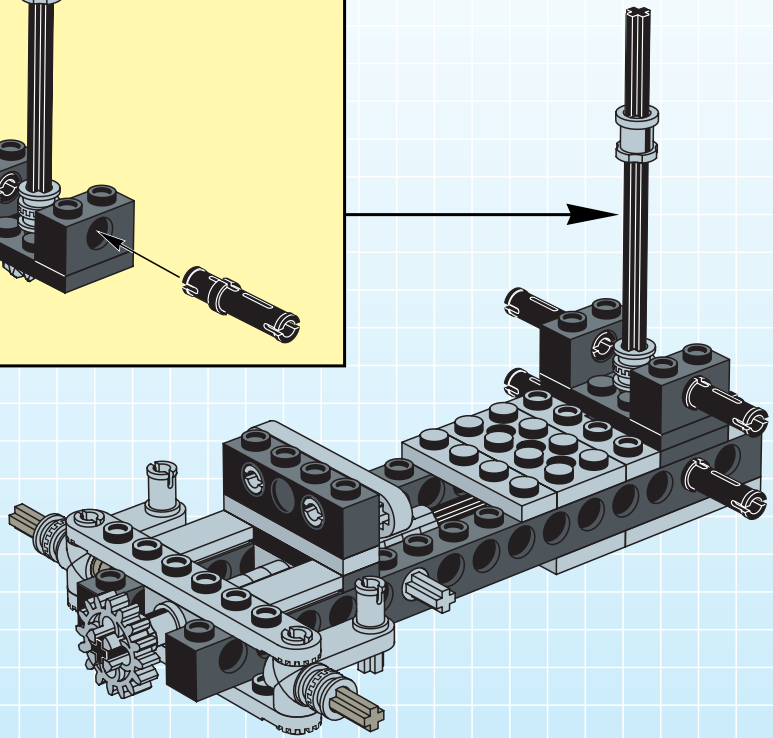

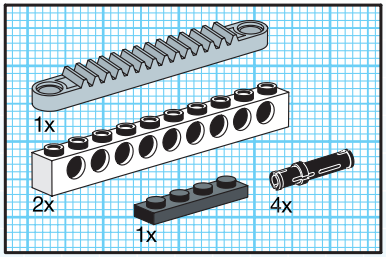

11

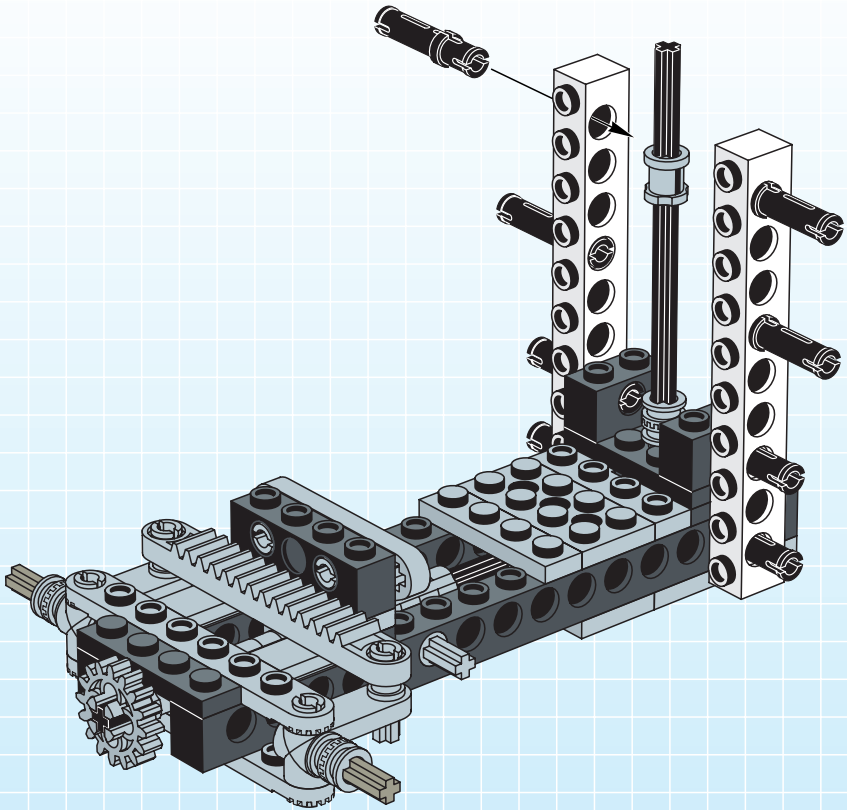

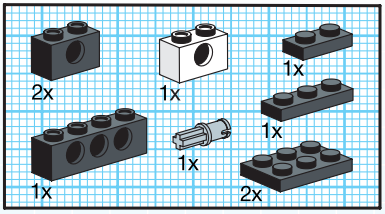

12

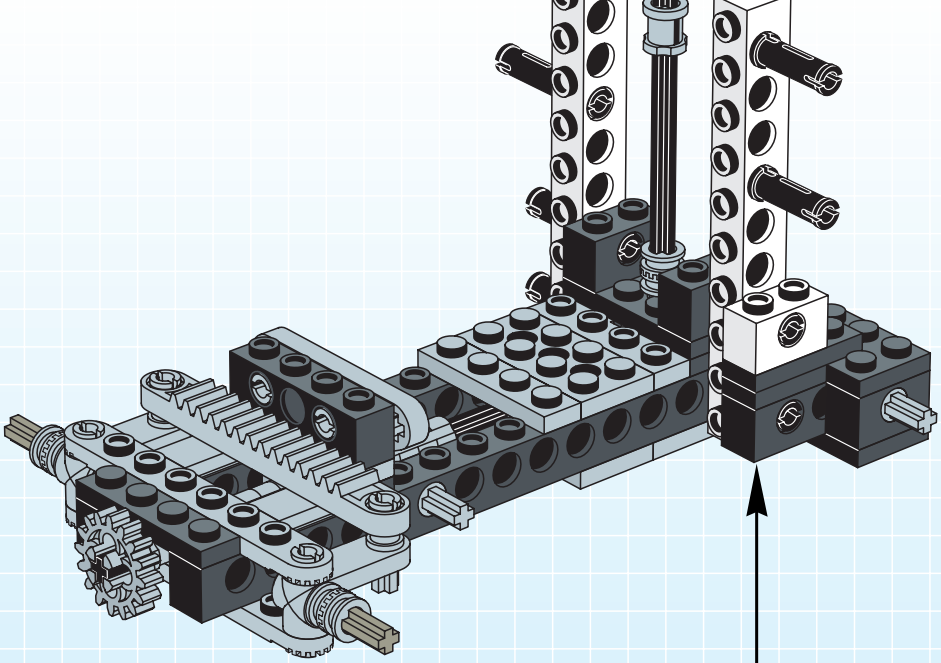

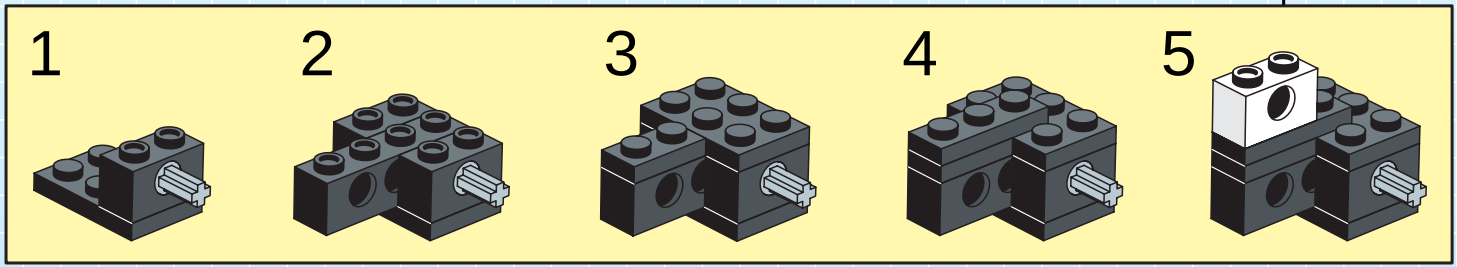

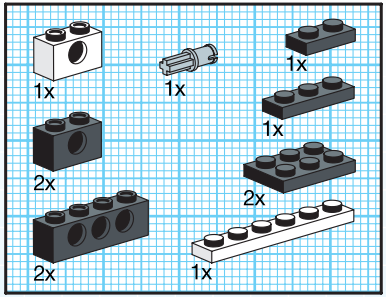

13

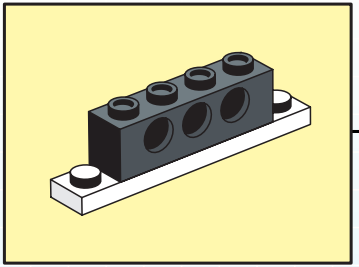

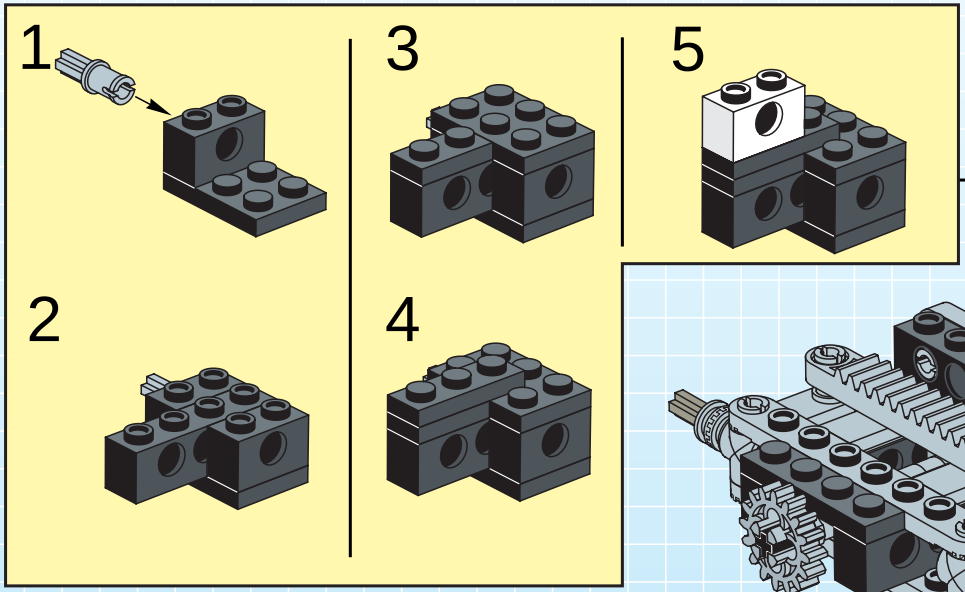

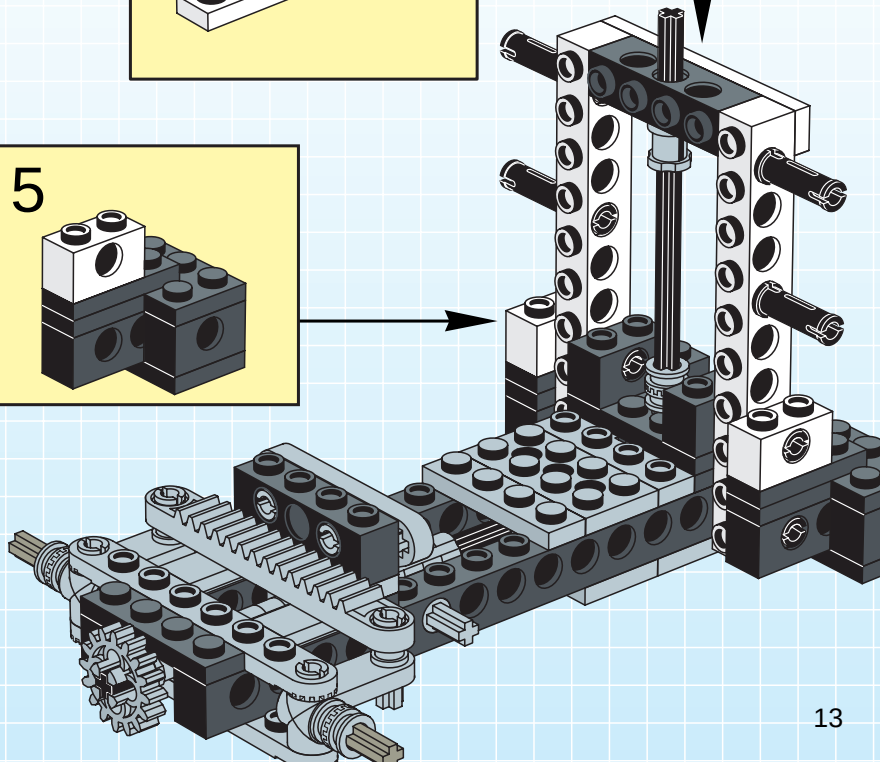

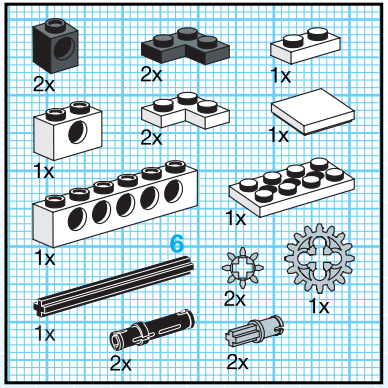

14

1

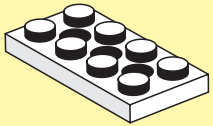

2

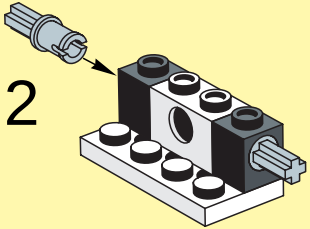

3

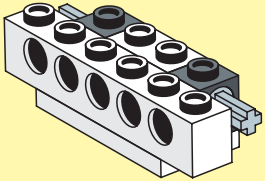

4

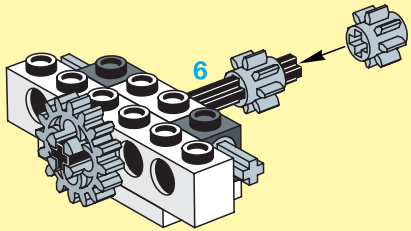

5

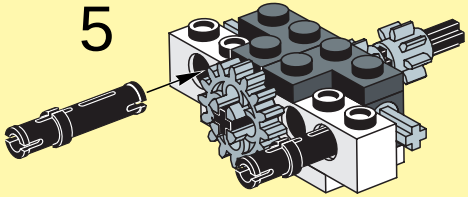

6

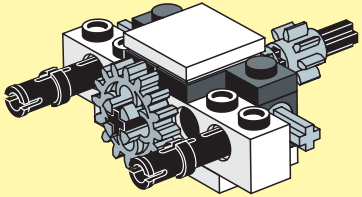

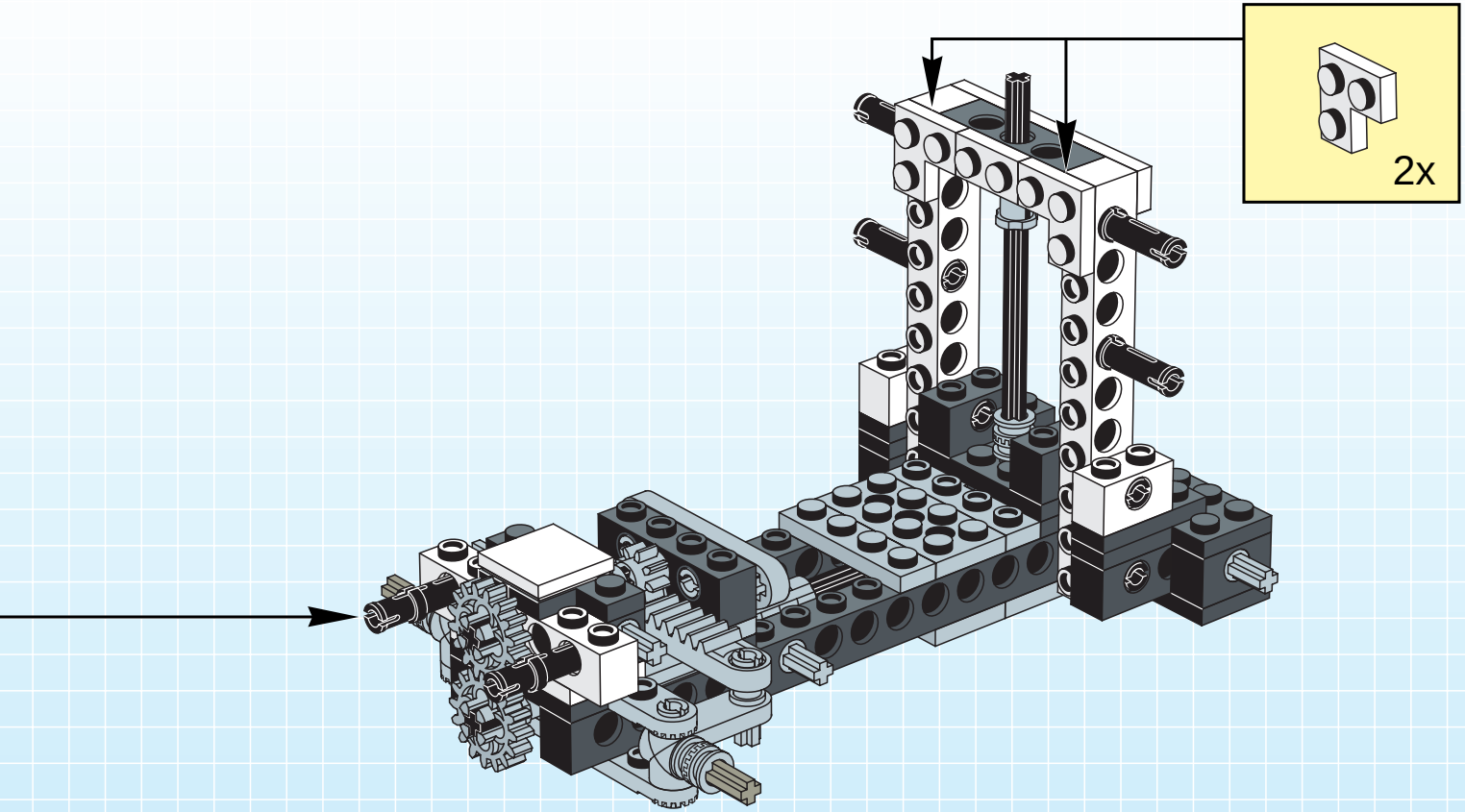
2x

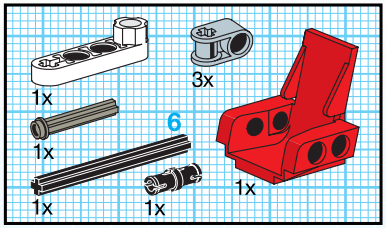

15

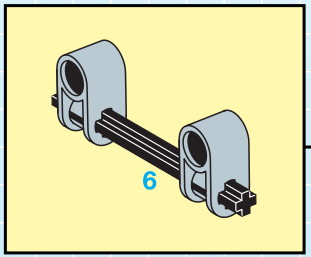

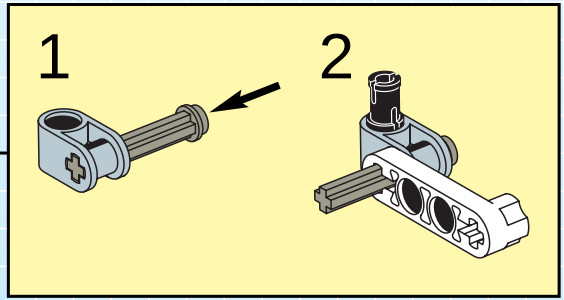

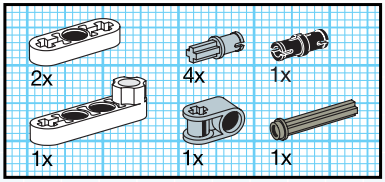

16

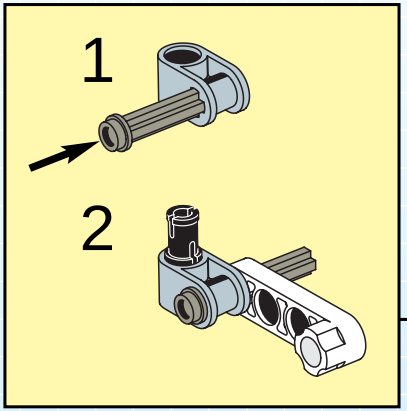

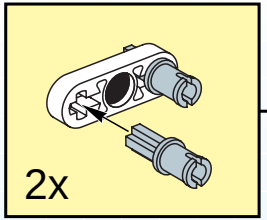

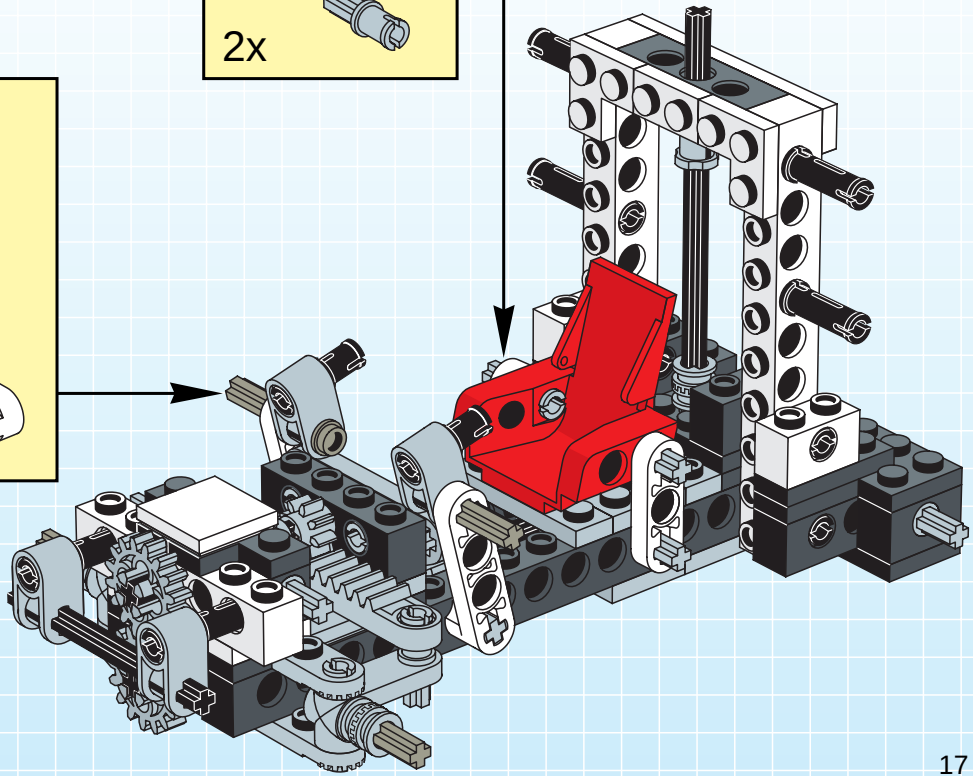

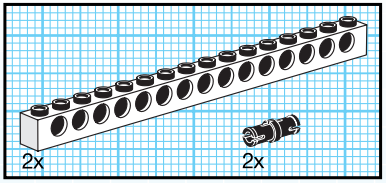

17

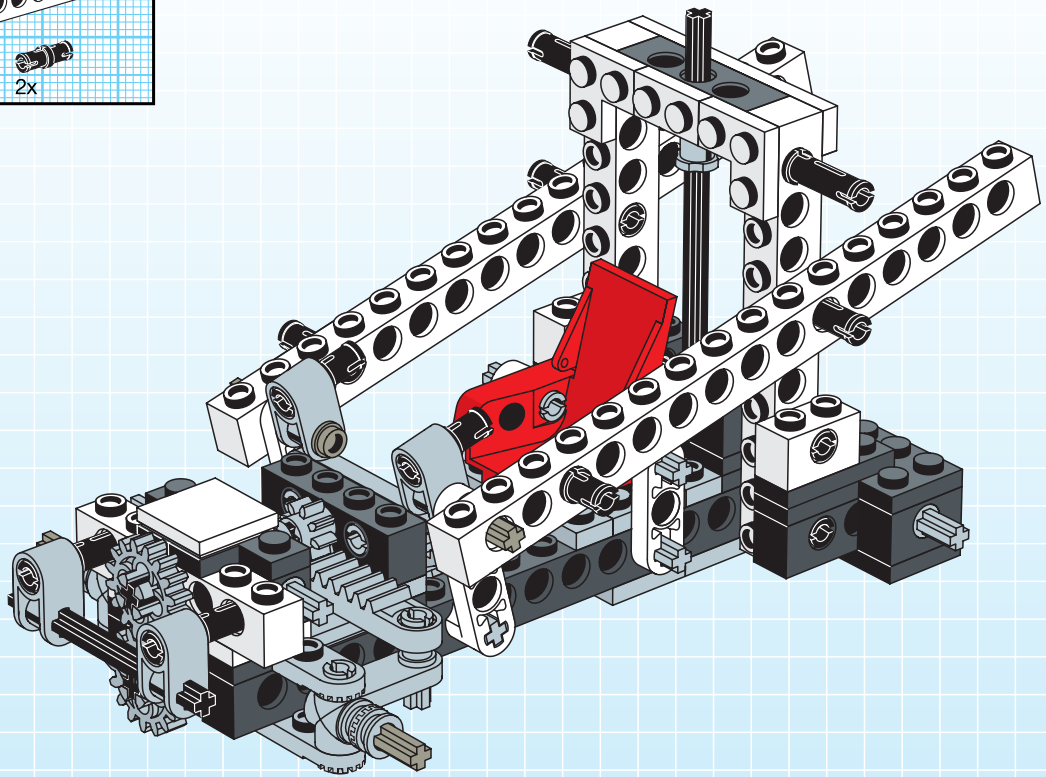

18

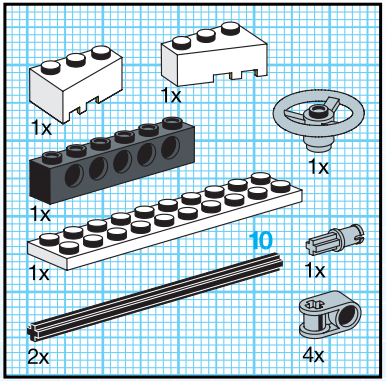

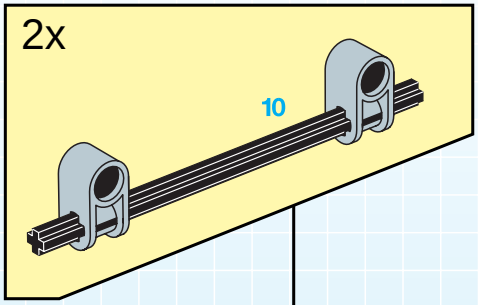

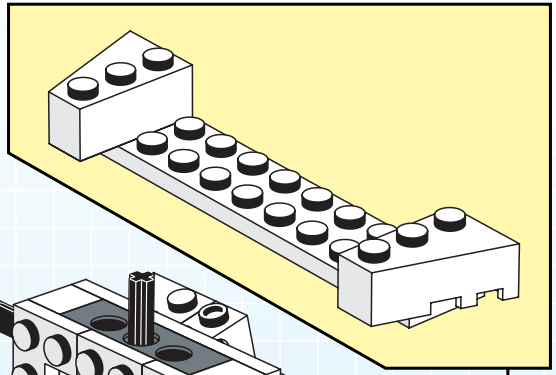

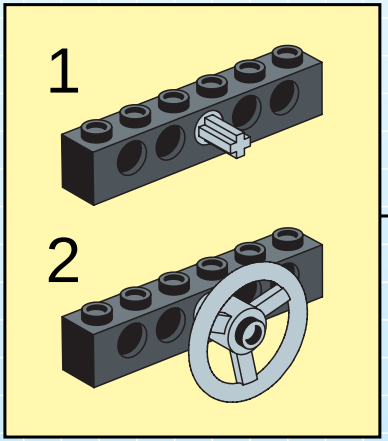

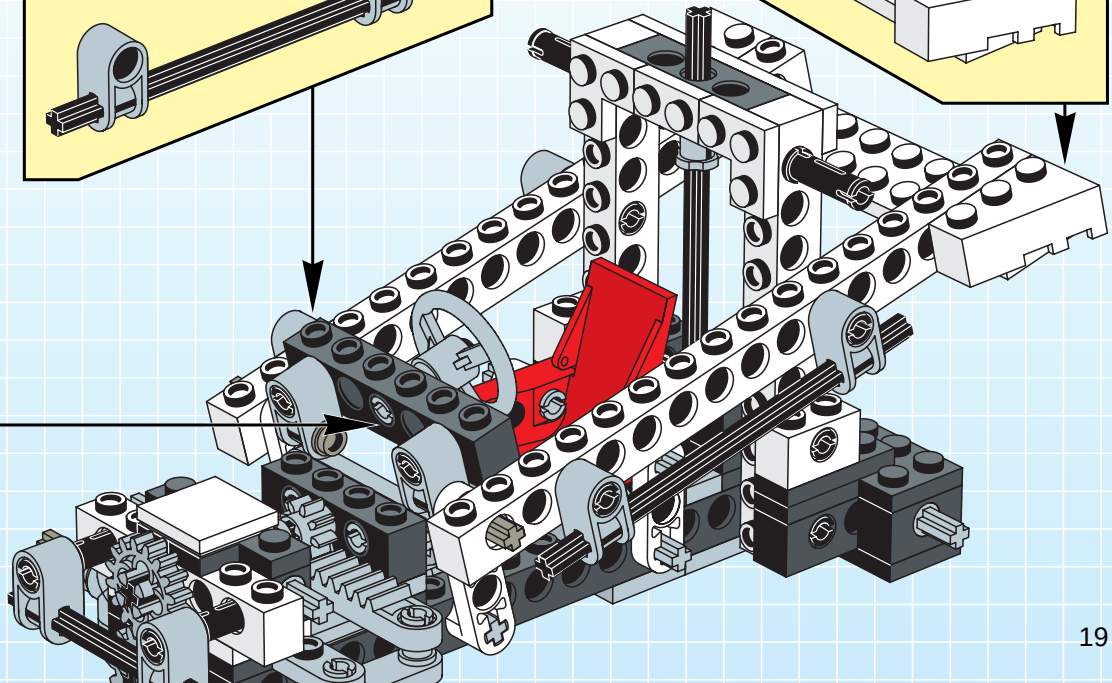

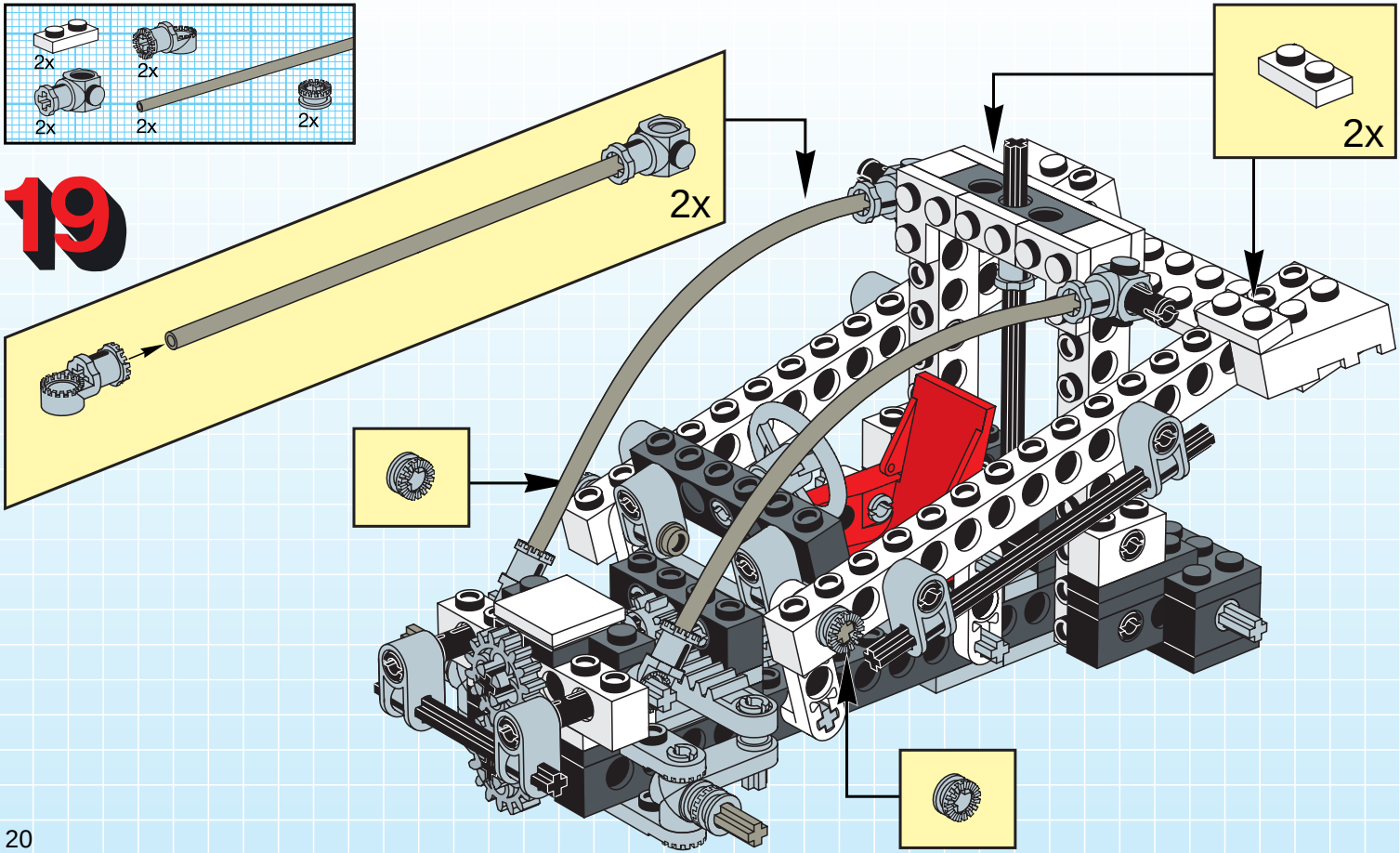
2x
2x
2x
2x
2x
19
2x
2x

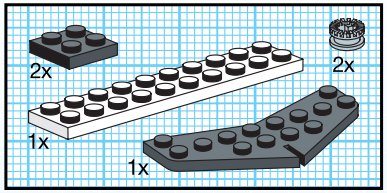

20

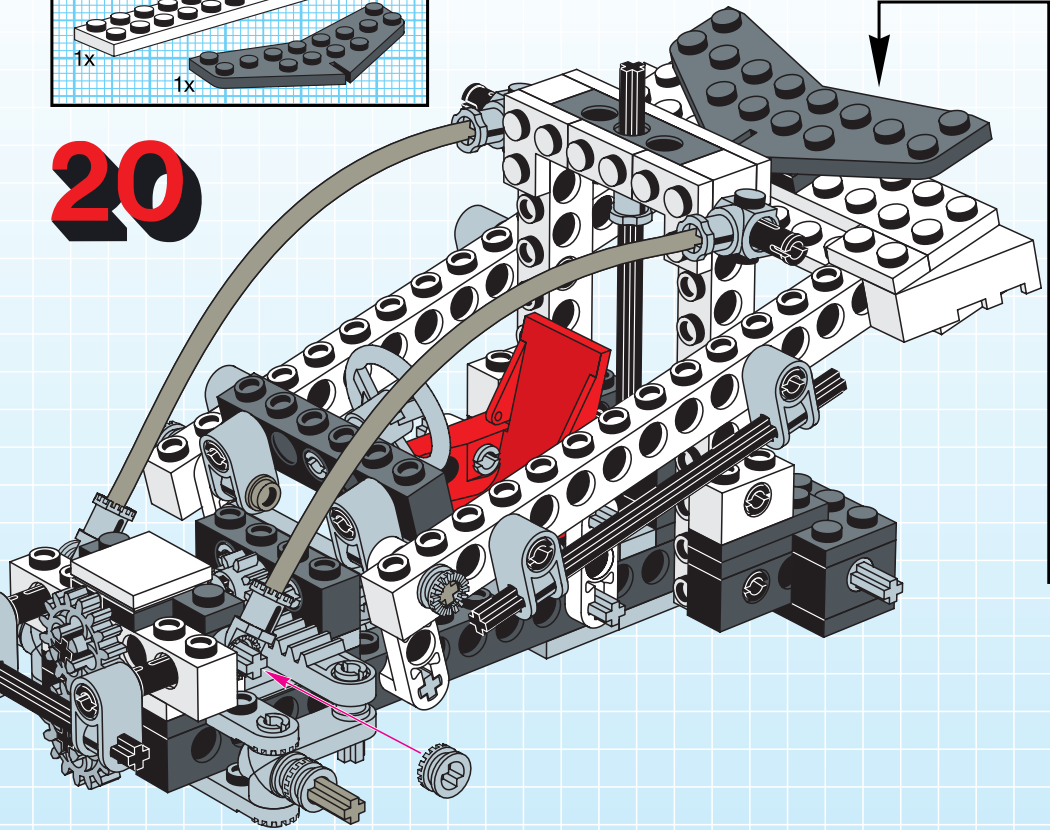

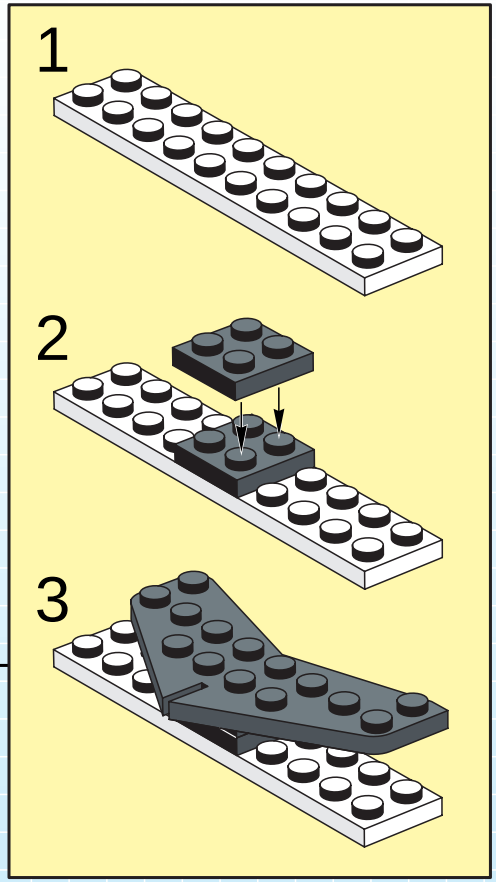

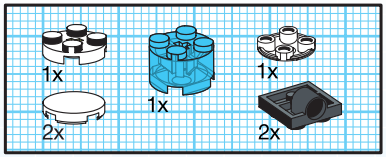

21

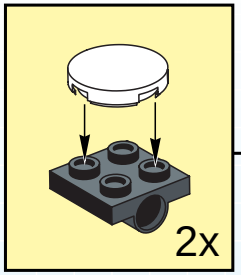

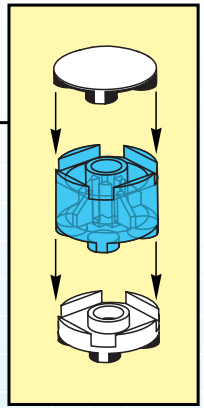

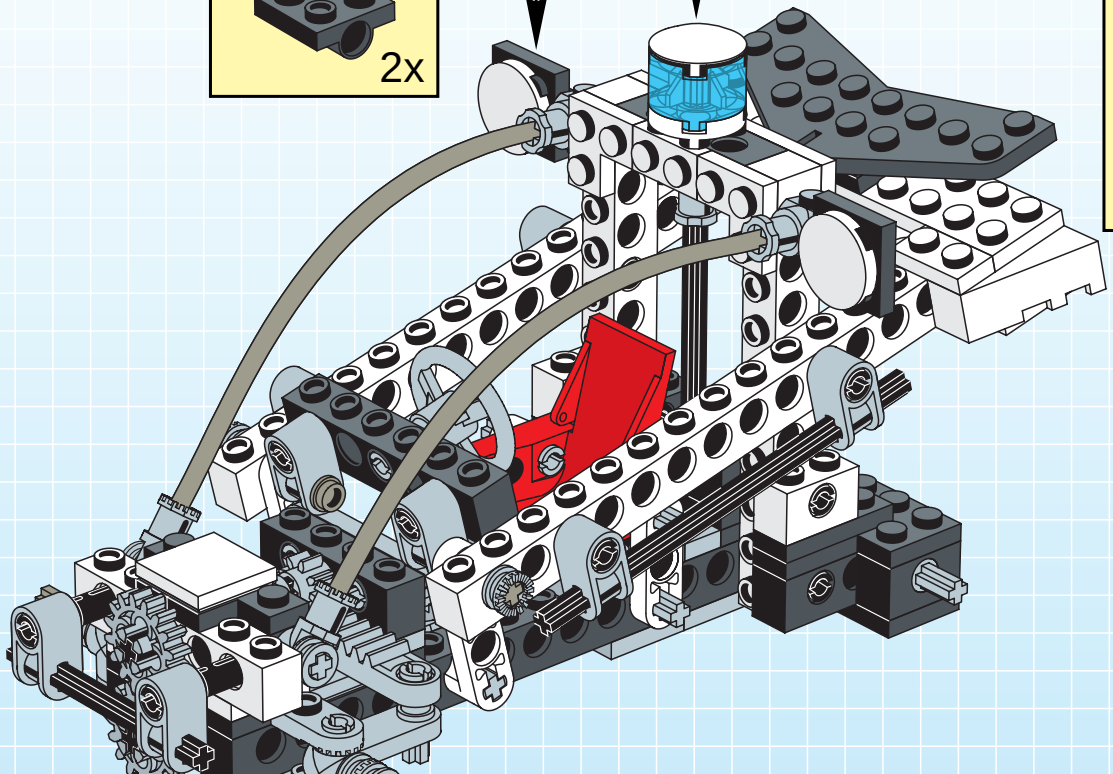

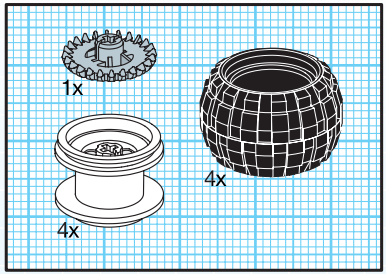

22

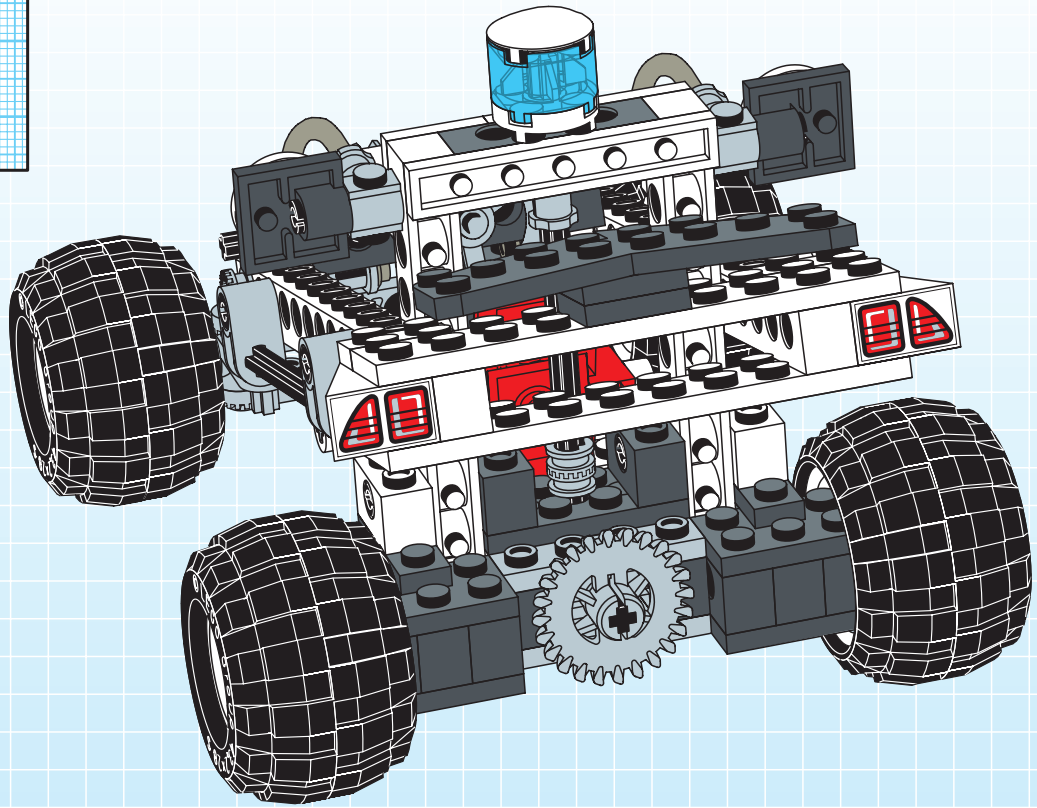

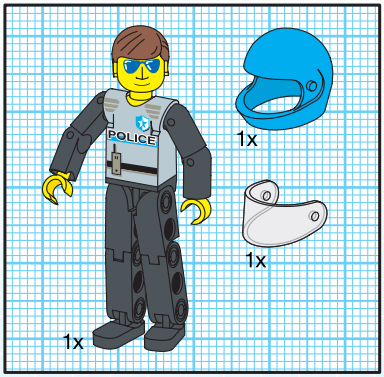
POLICE
1x
1x
1x

23

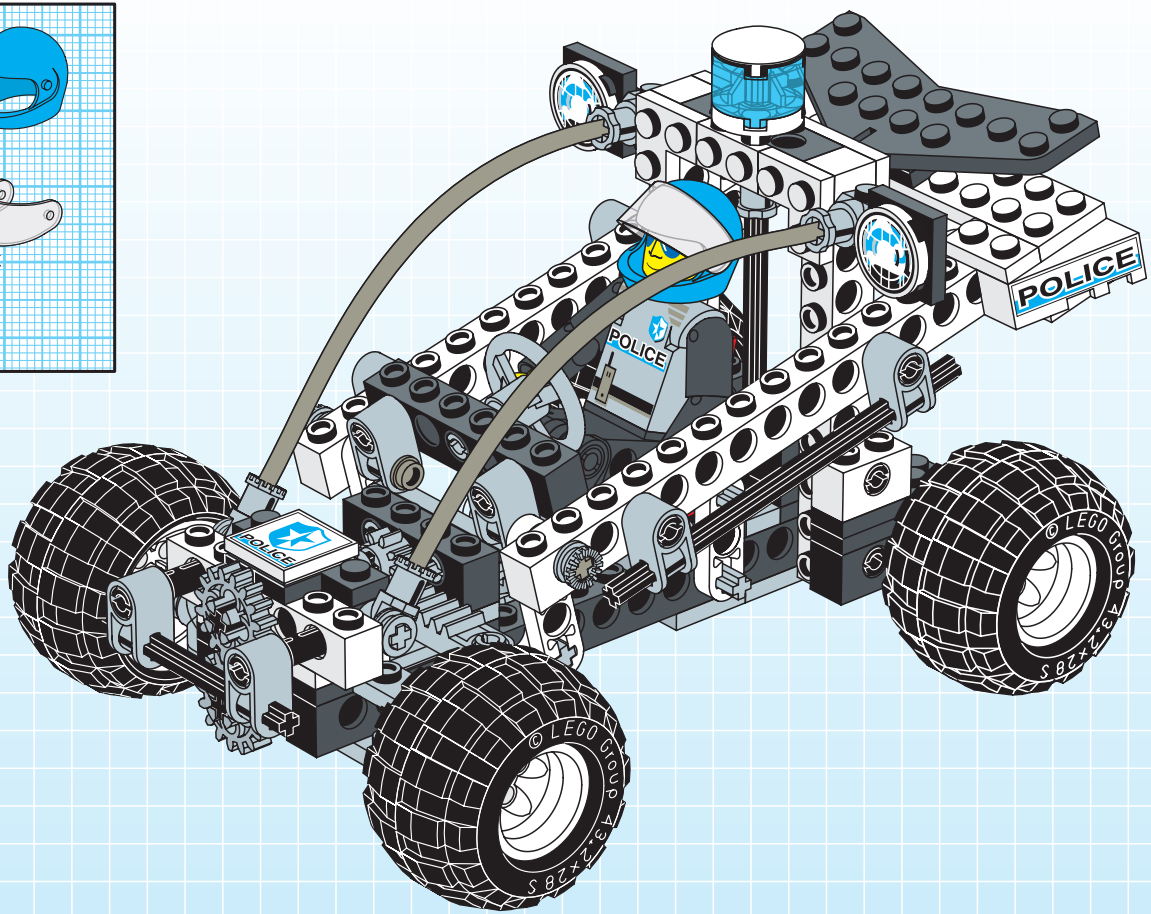
POLICE
POLICE
POLICE
© LEGO Group 4.3.2x28 S
© LEGO Group 4.3.2x28 S

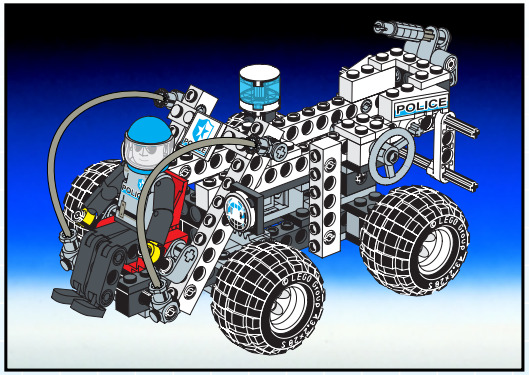

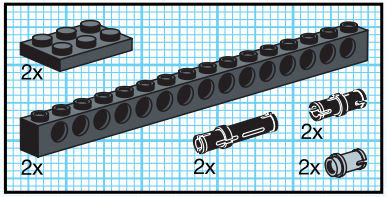

1

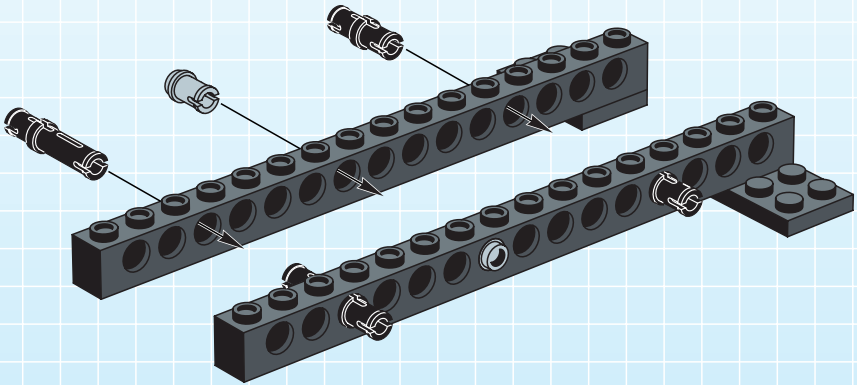

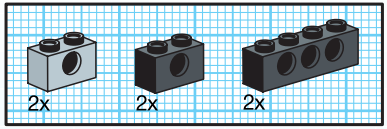

2

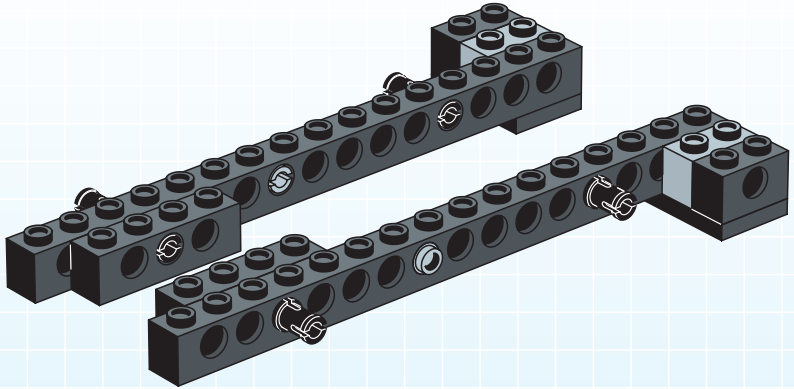

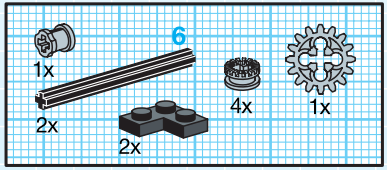

3

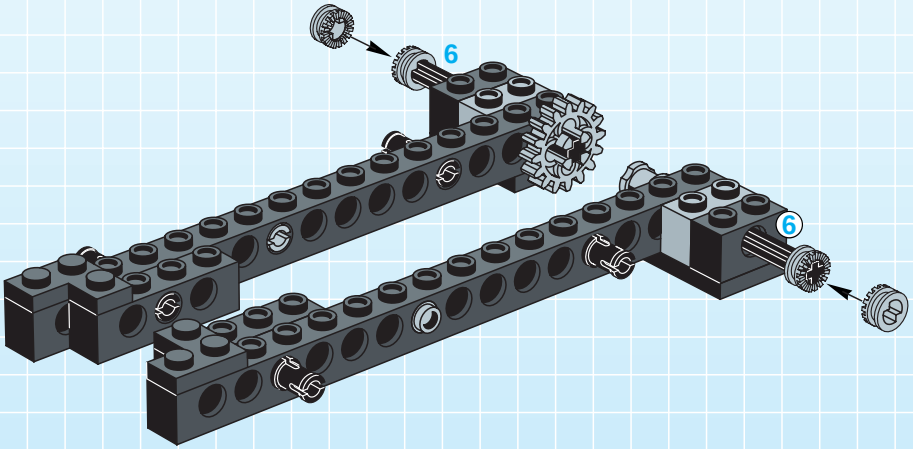

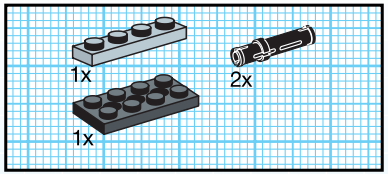

4

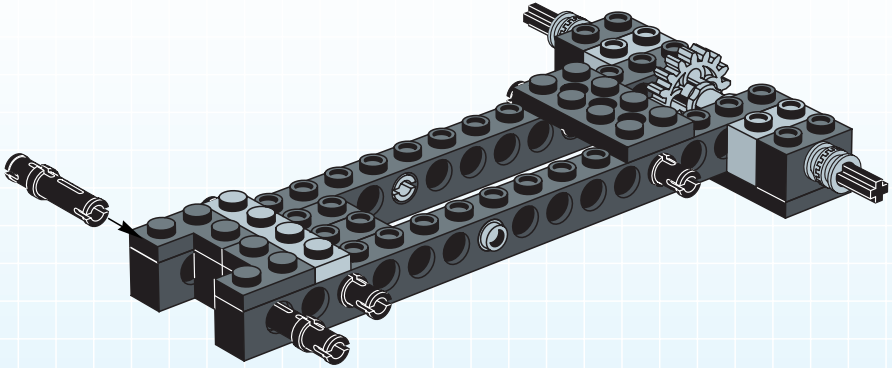

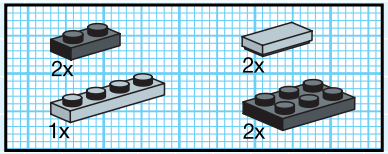

5

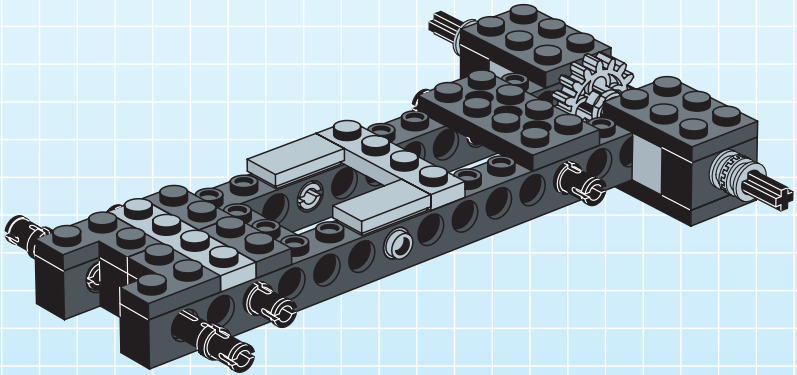

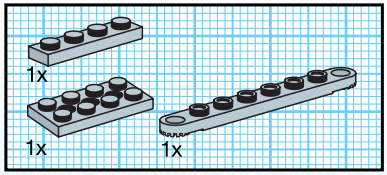

6

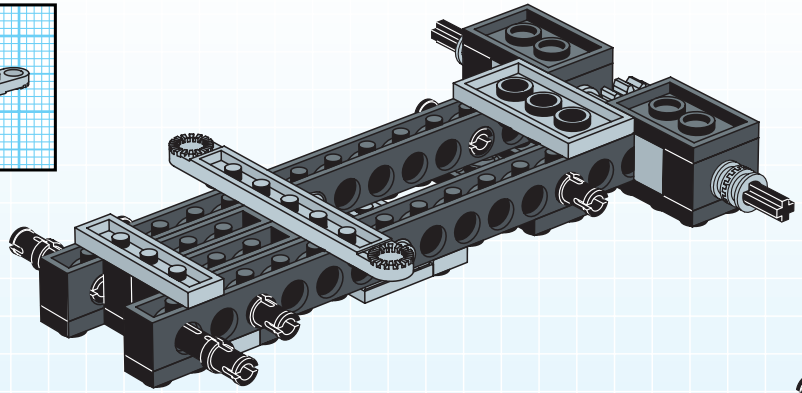

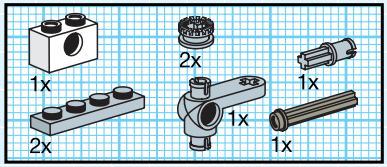

7

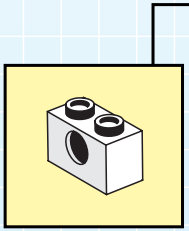

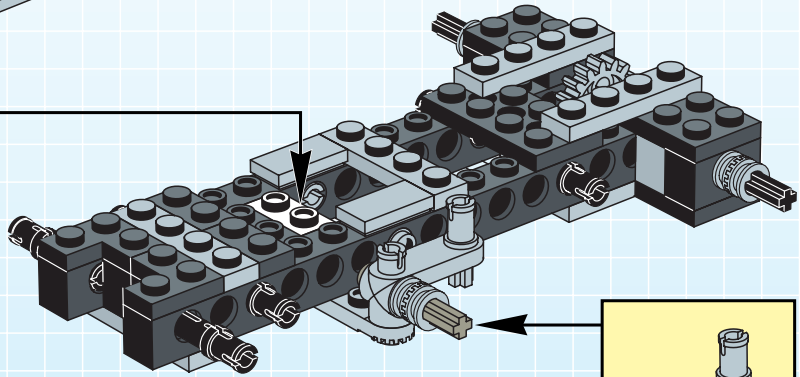

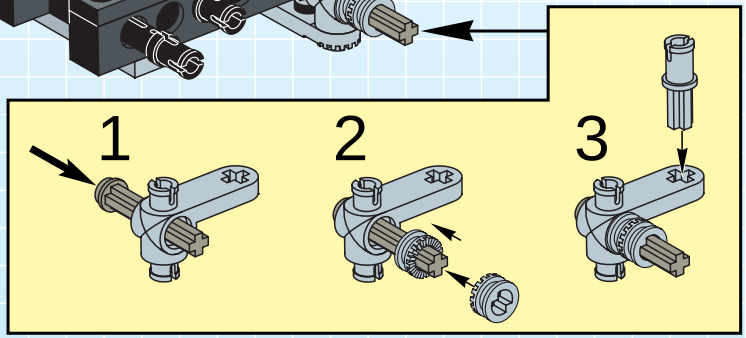

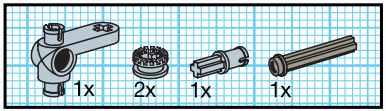

8

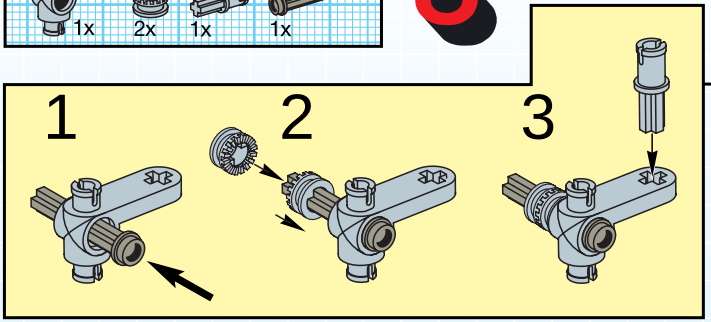

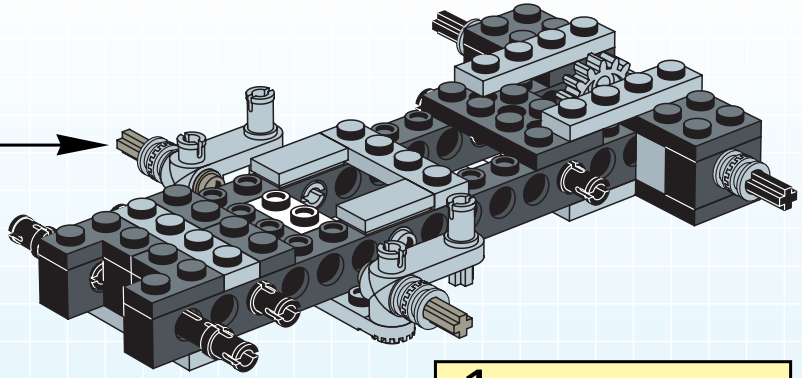

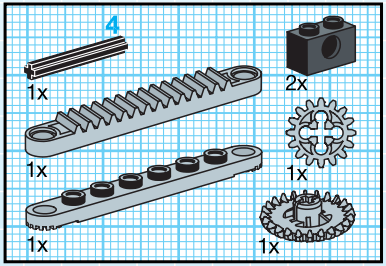

9

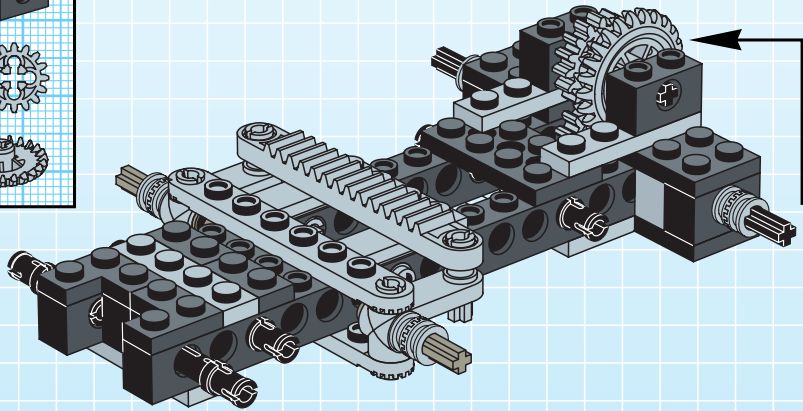

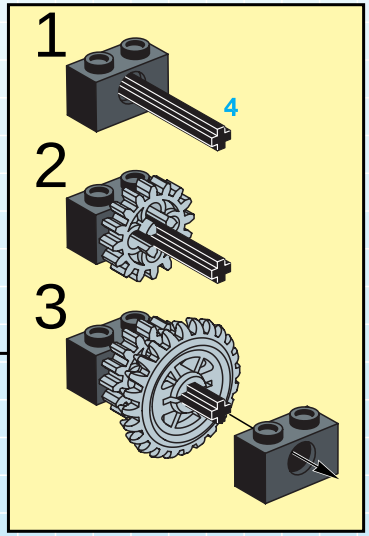

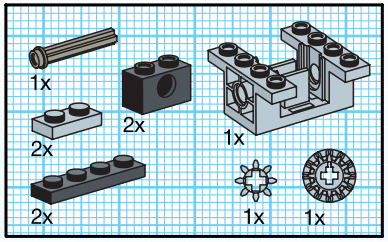

10

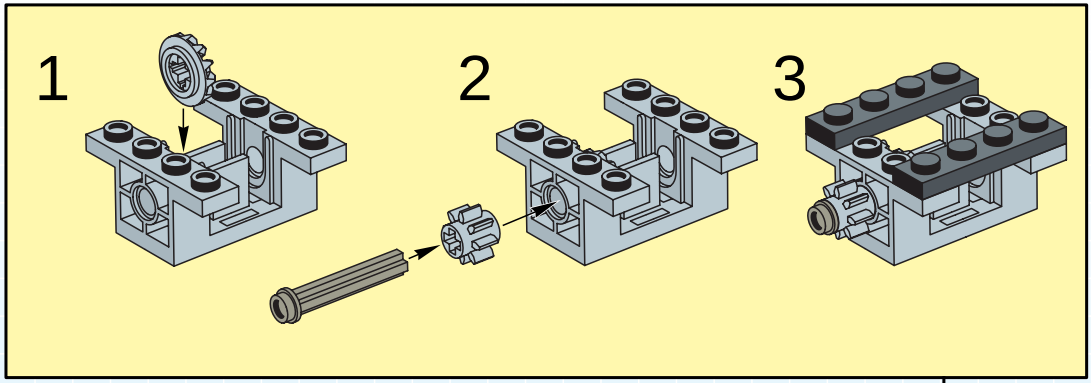

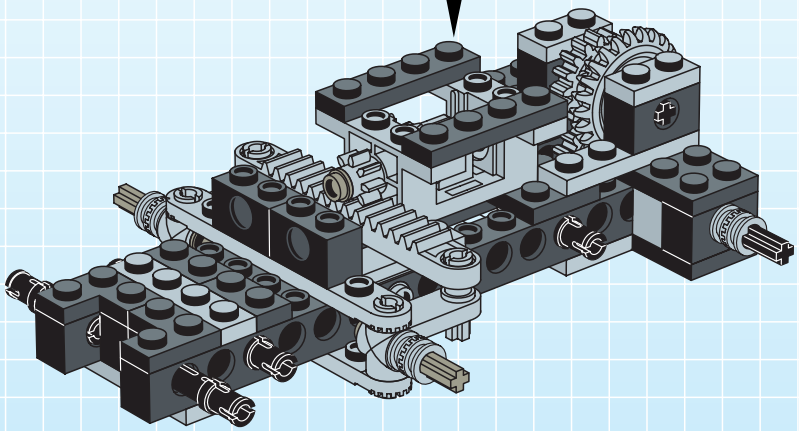

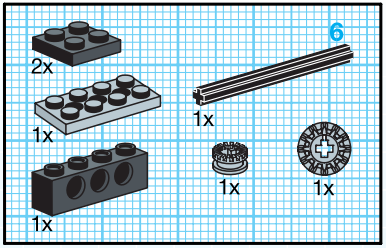

11

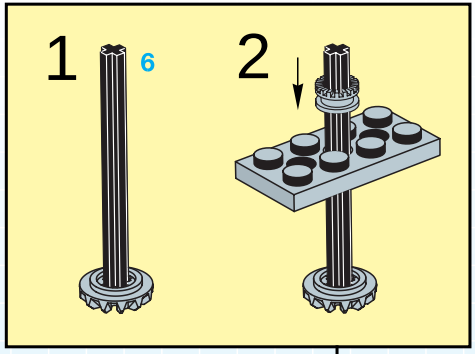

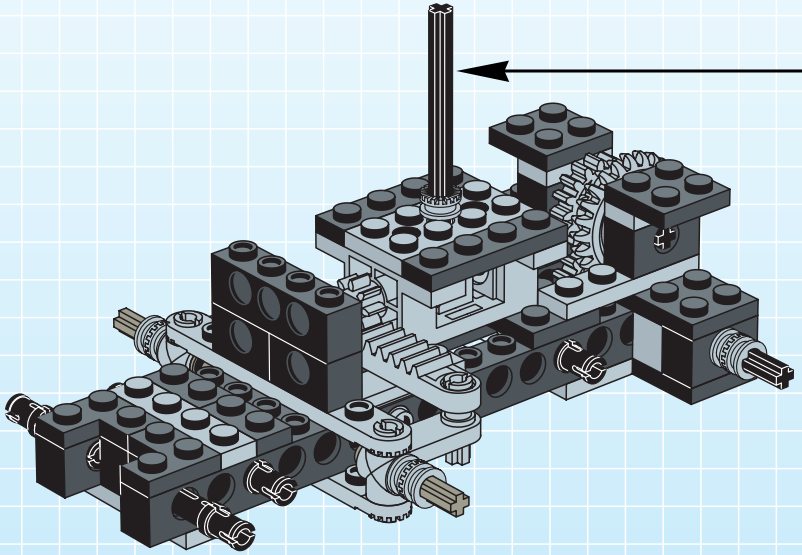

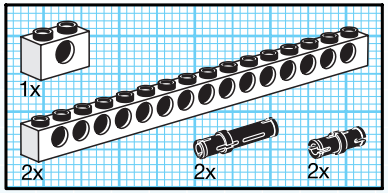

12

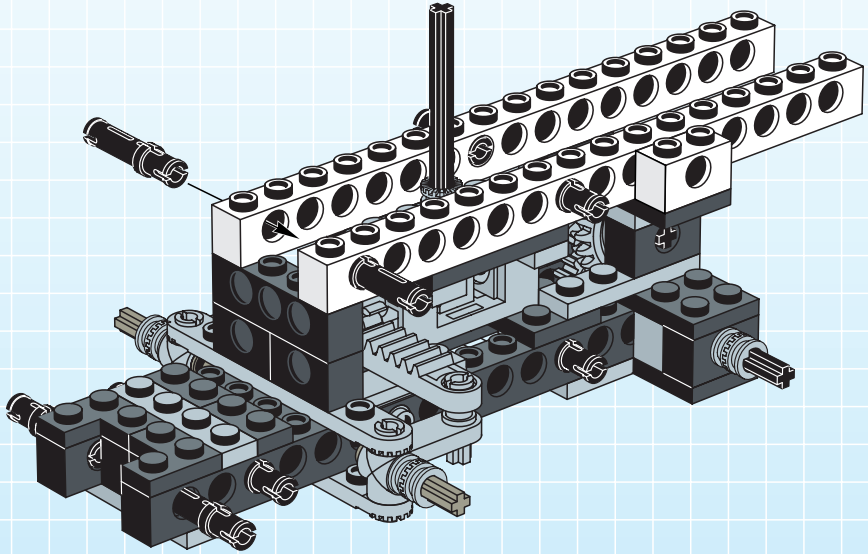

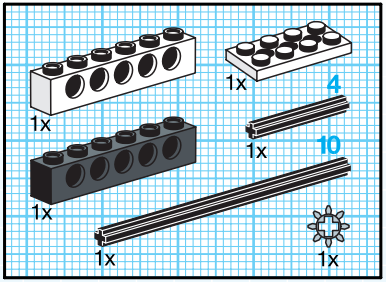

13

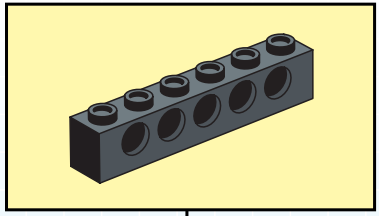

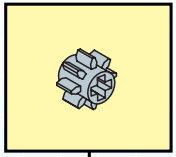

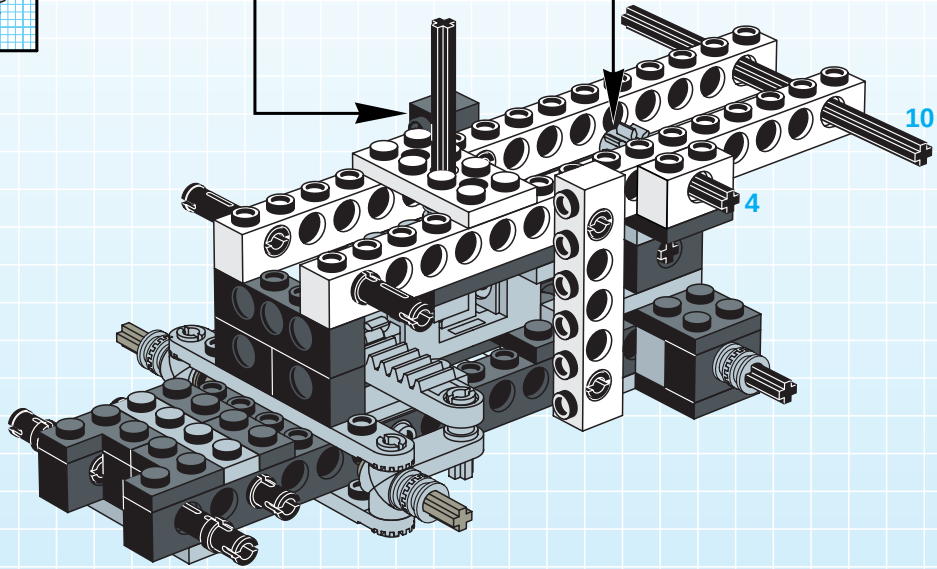

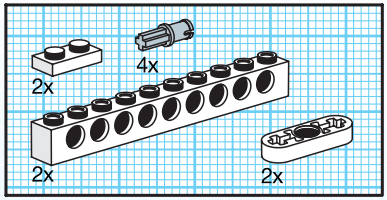

14

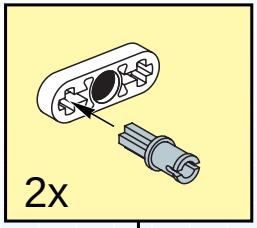

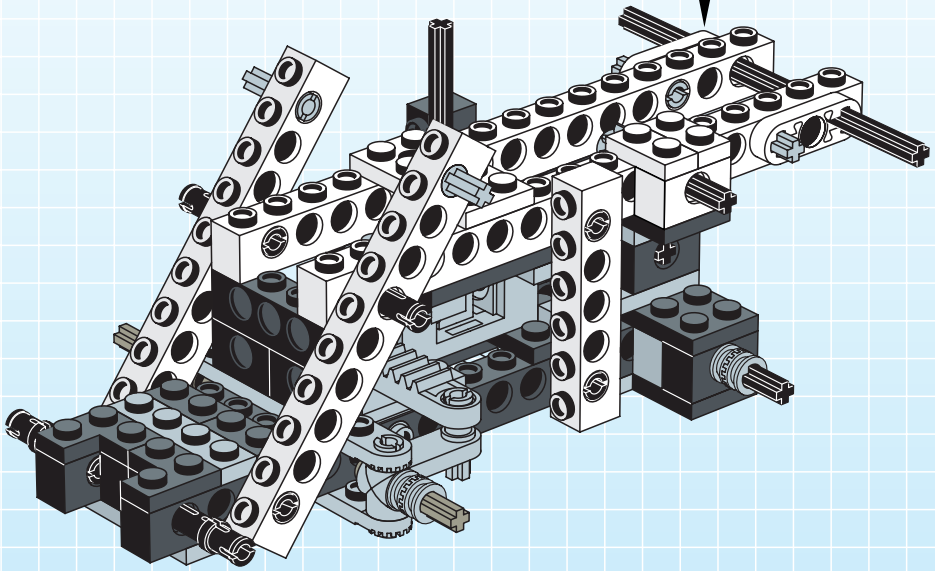

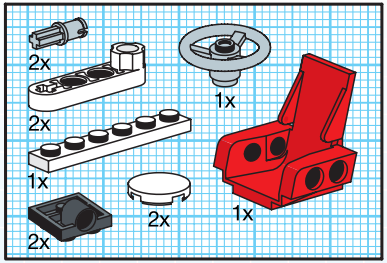

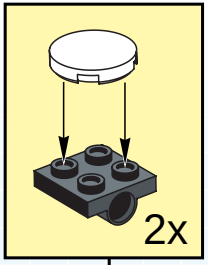

15

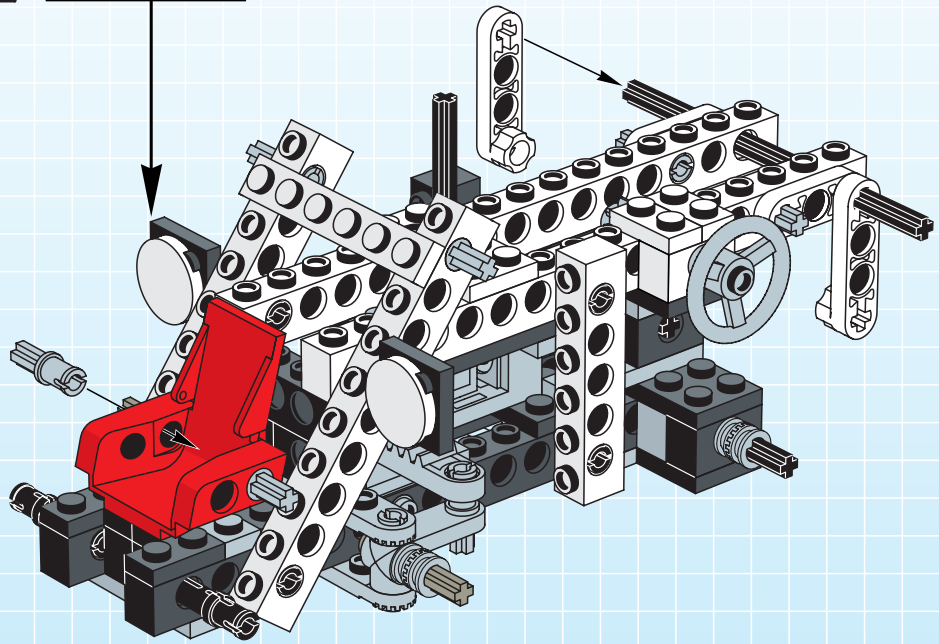

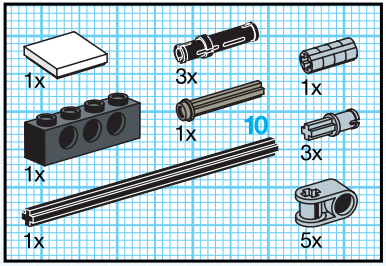

16

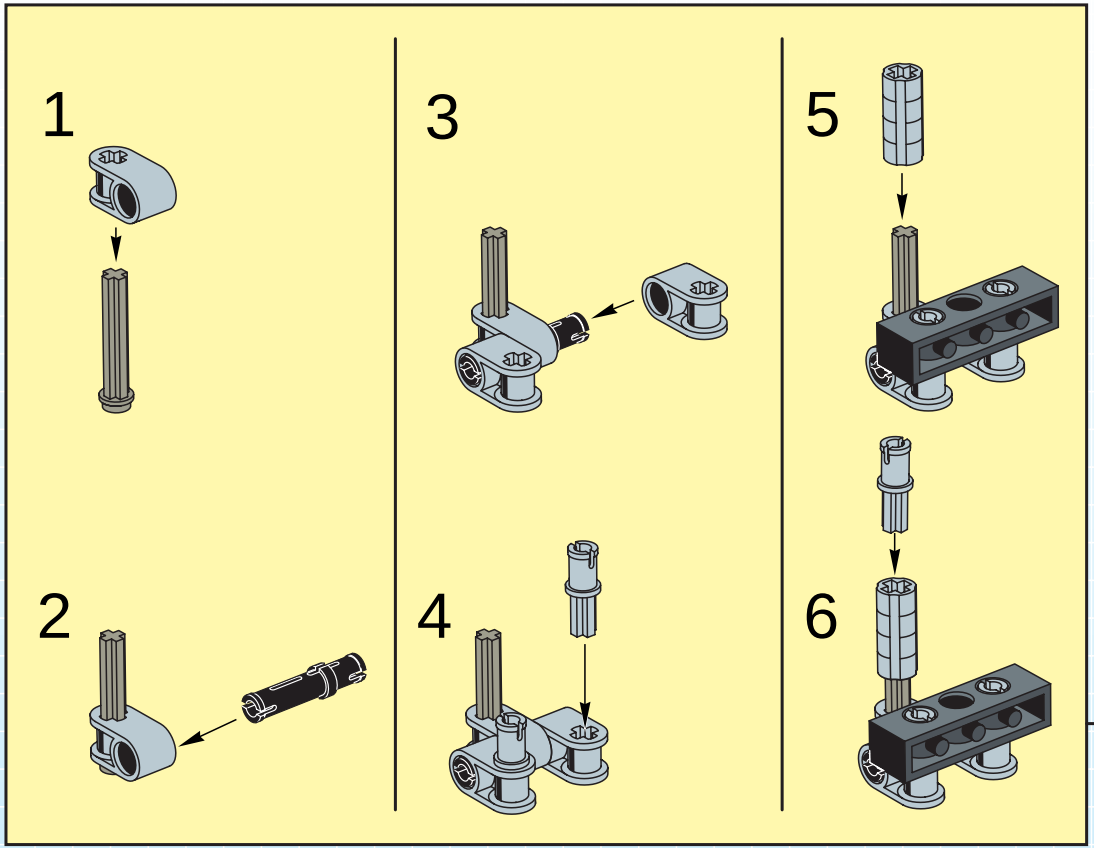

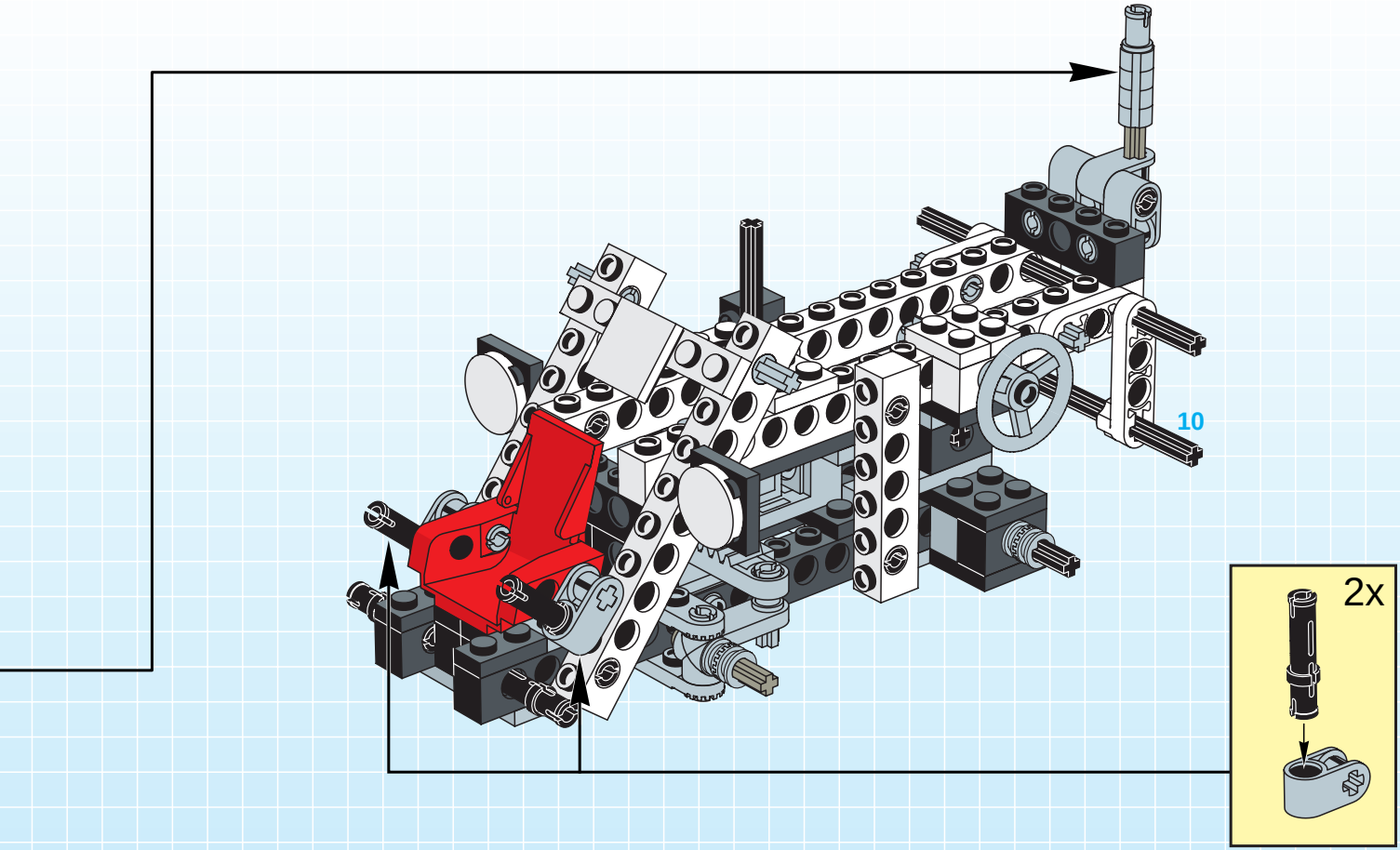
10
2x

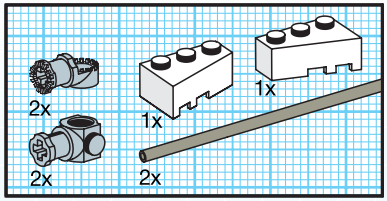

17

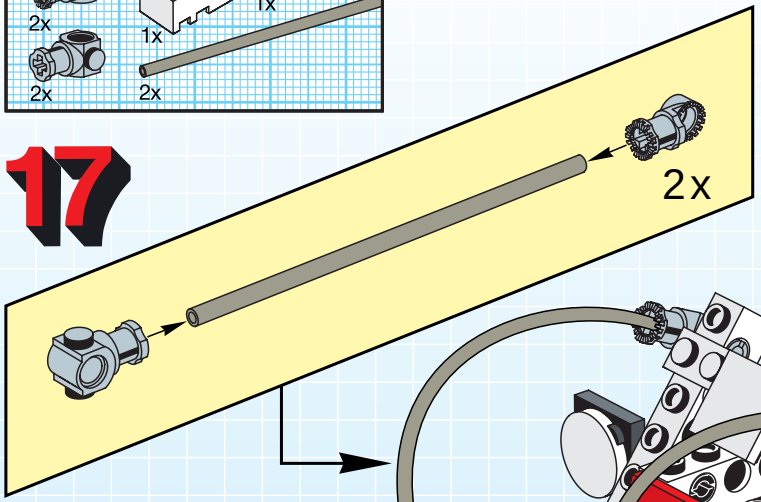

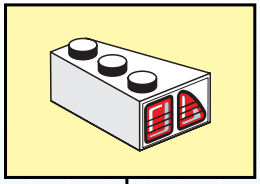

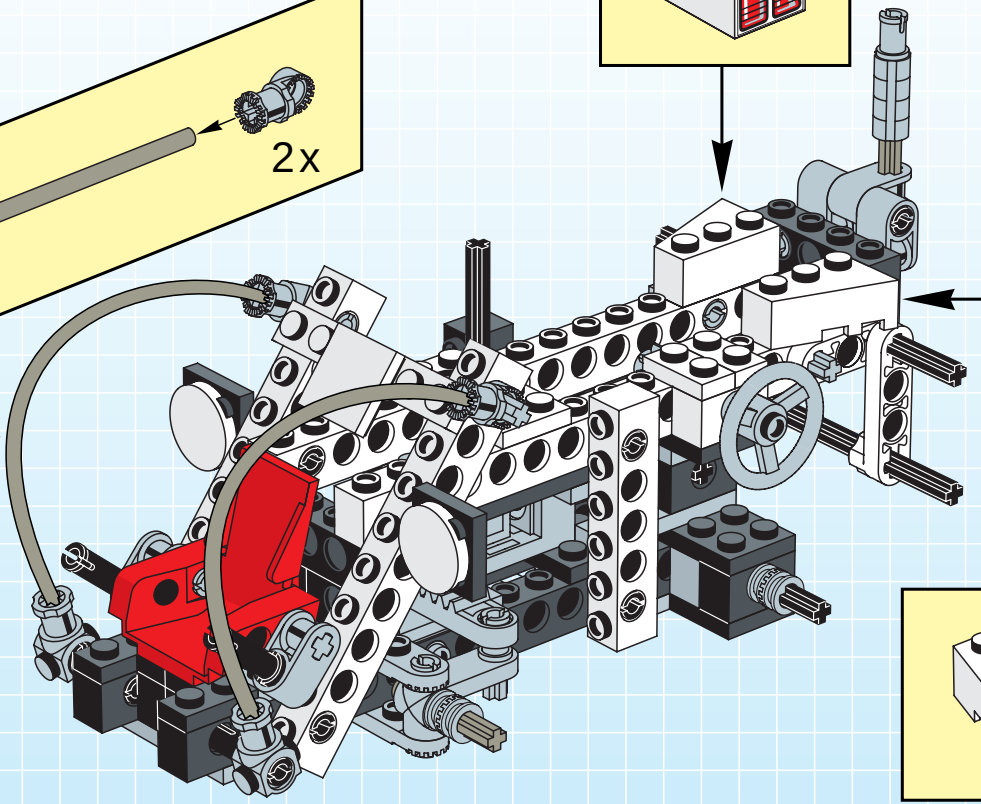

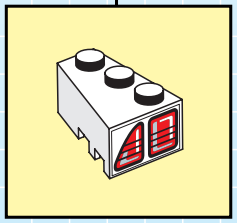

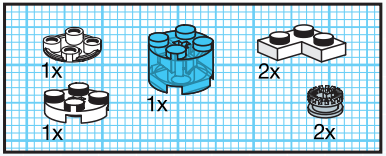

18

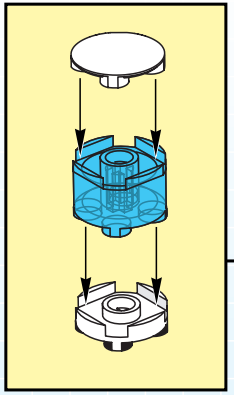

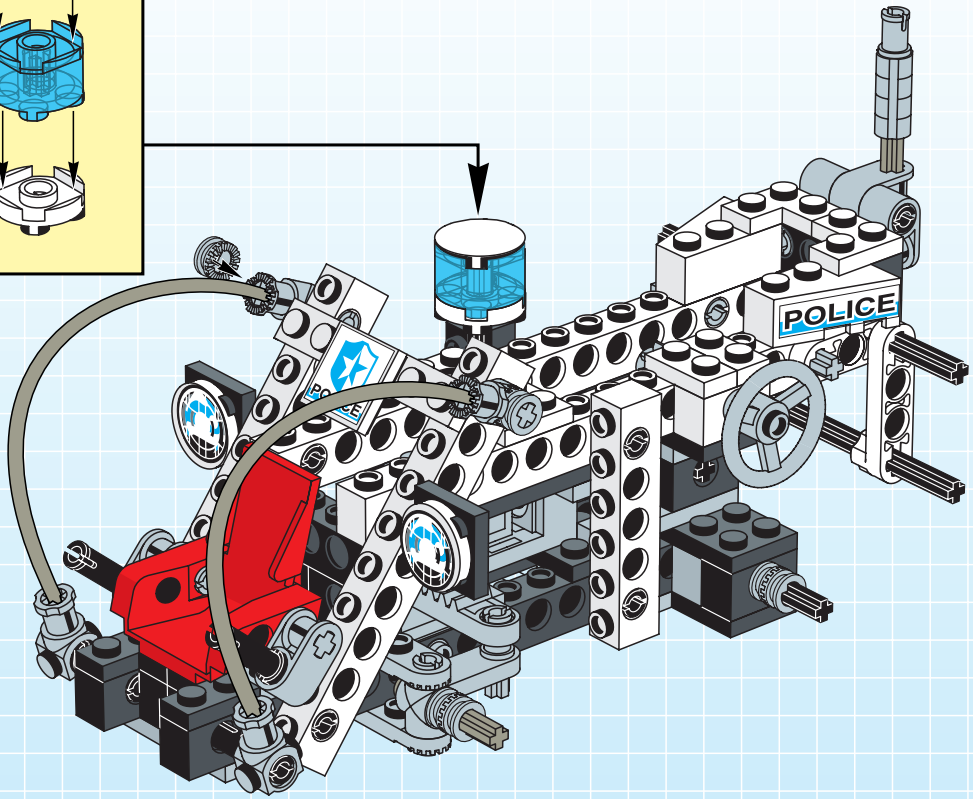

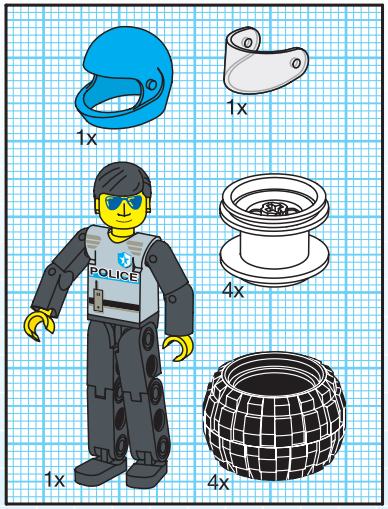
1x
1x
4x
1x
4x

19

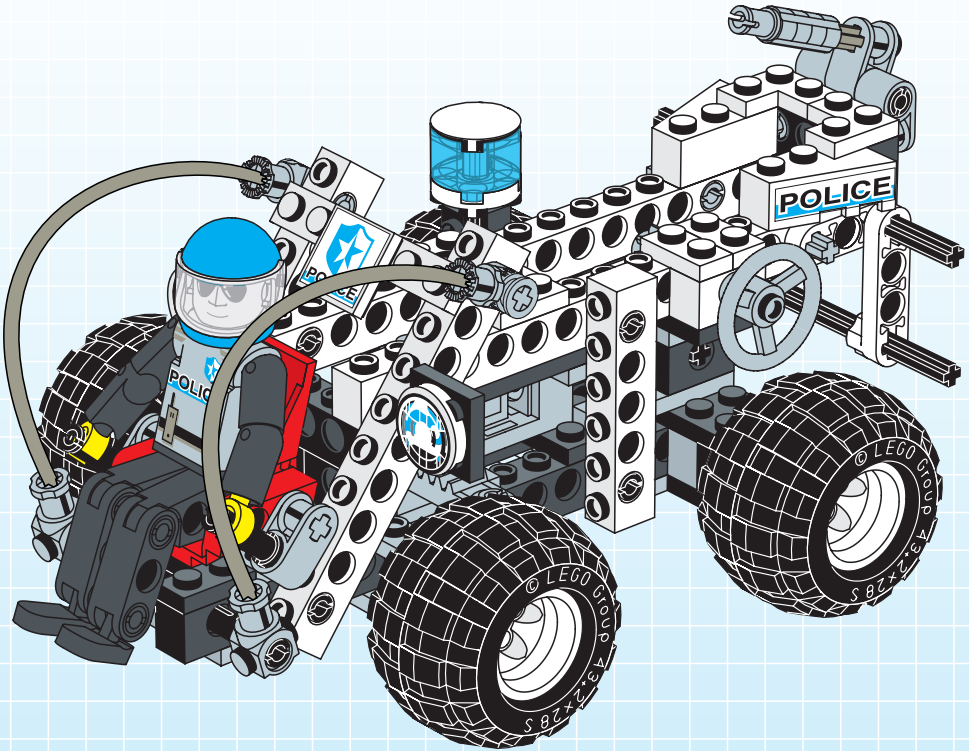
POLICE
© LEGO Group A3x2x28 S
© LEGO Group A3x2x28 S

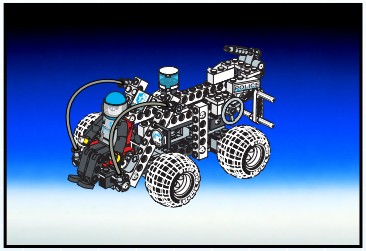

+

=

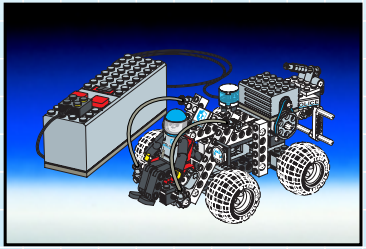

1

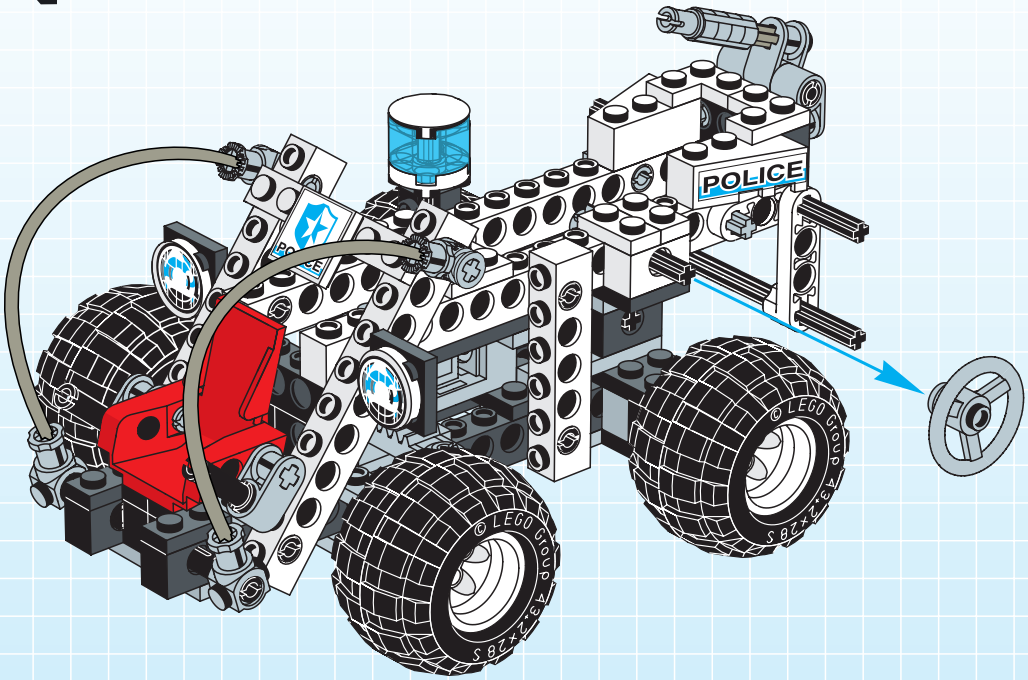

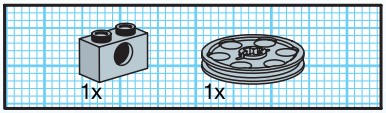

2

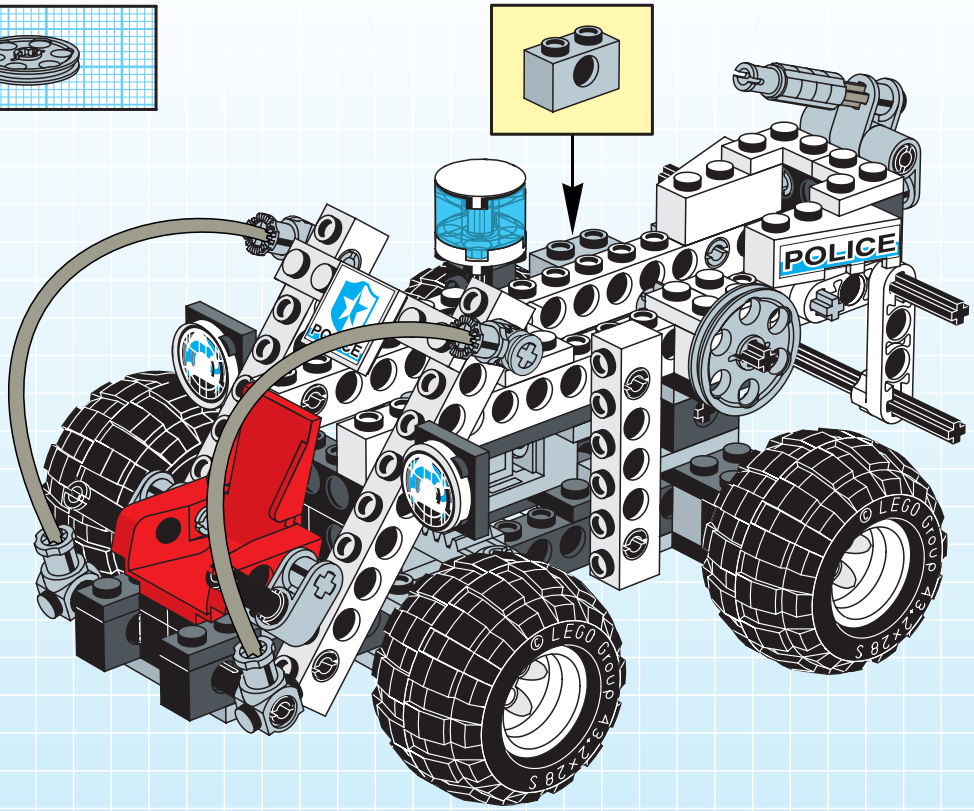

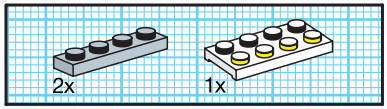

3

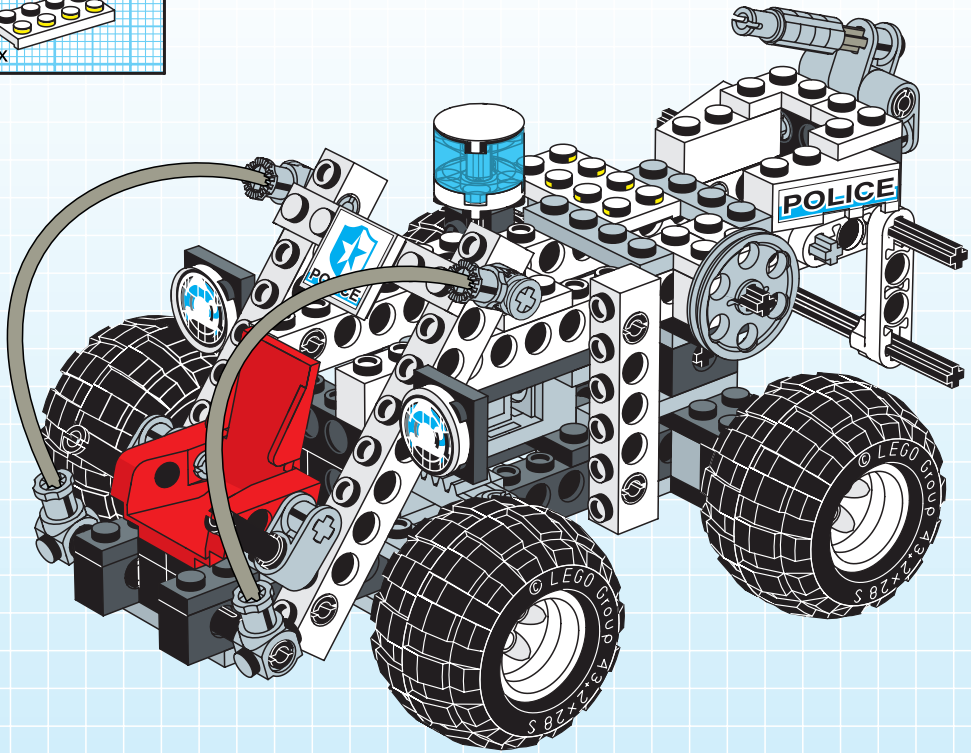

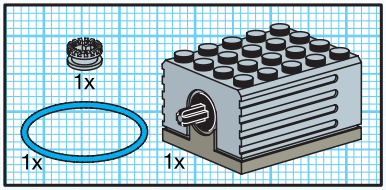

4

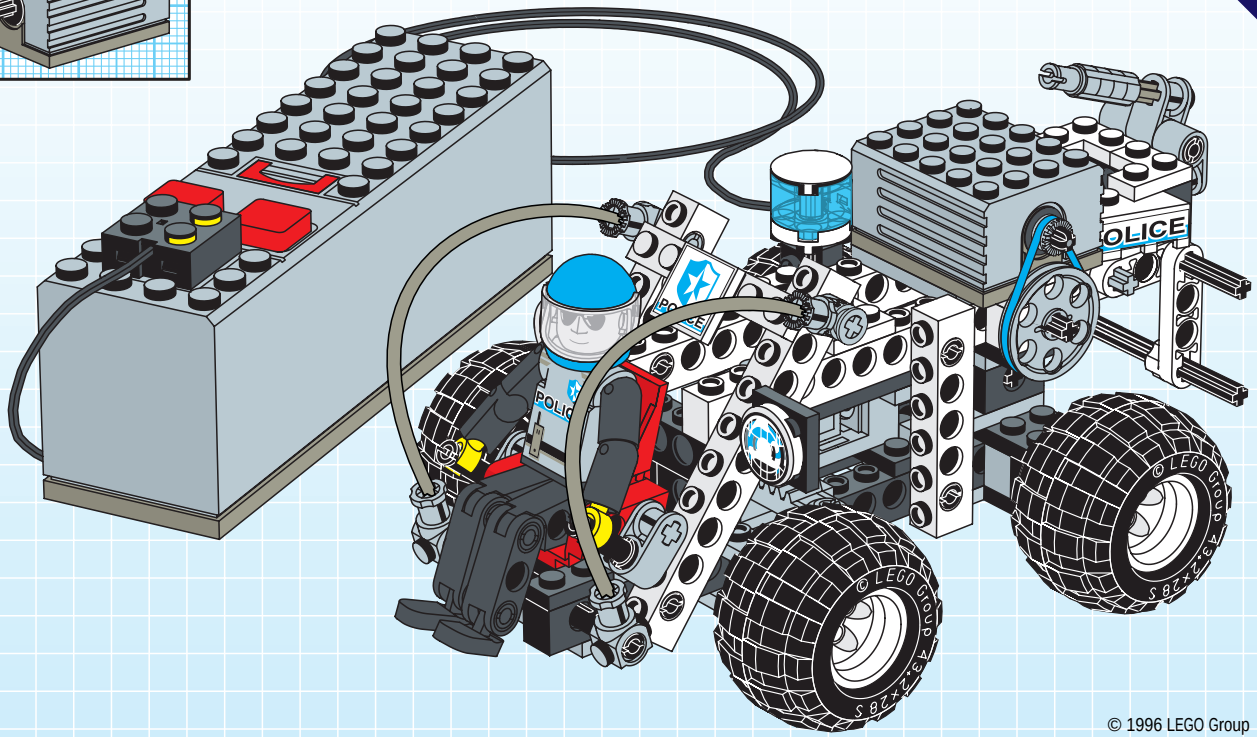

© 1996 LEGO Group